FILE NAME

REVISIONS				
ZONE	LTR	DESCRIPTION	DATE	APPROVED

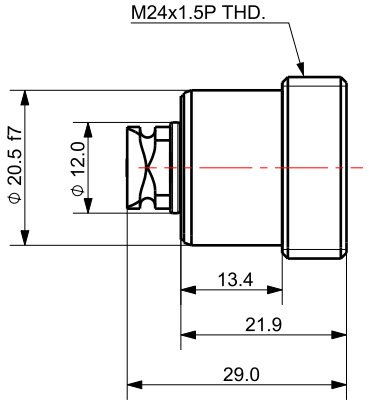

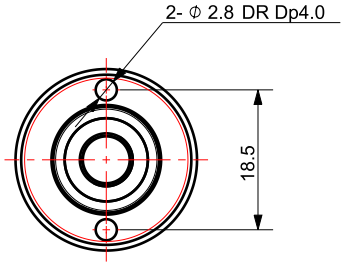

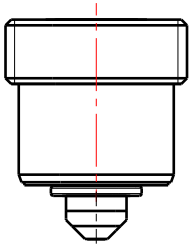

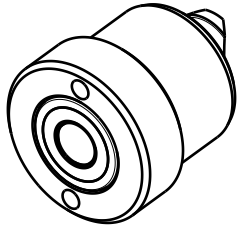

Isometric view (1:1)

CIRCUIT SYMBOL

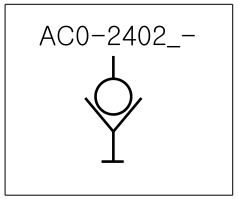

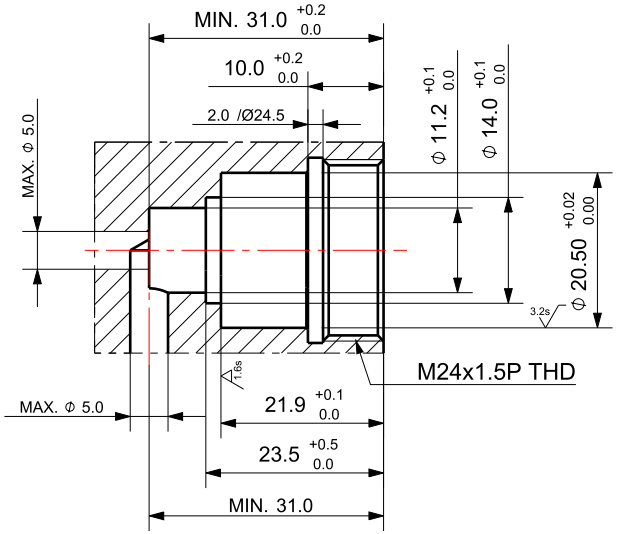

MOUNTING 가공치수

DET.NO	NAME	Q'TY	MAT'L	FINAL SIZES & PART No	REMARK

UNLESS OTHERWISE SPECIFIED	SIGNATURES	MO-DA-YR
DIMENSIONS ARE IN MM	DRAWN	
ALL SURFACES 6.3S	CHECKED	
TOLERANCES	APPROVED	
ANGLE ±		
X. ±		
.X ± 0.15		
.XX ± 0.05		
FINISH	WORK ORDER NO	
HEAT TREAT		

케이제이에프(주)
TOTAL CLAMPING SYSTEMS

TITLE

AUTO COUPLER (OIL)

REF DWG NO.	DWG NO	
---	ACO-2402	A4
SCALE /	TOOL ☐ PART ☐	SHEET OF