FILE NAME:

REVISIONS				
ZONE	LTR	DESCRIPTION	DATE	APPROVED

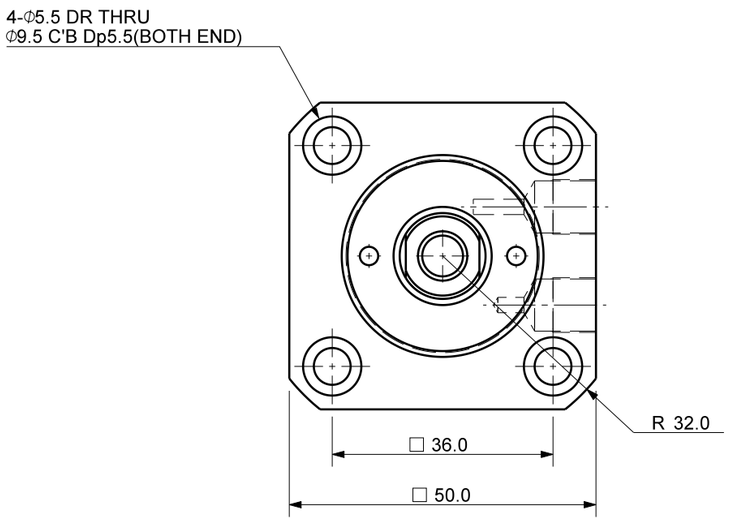

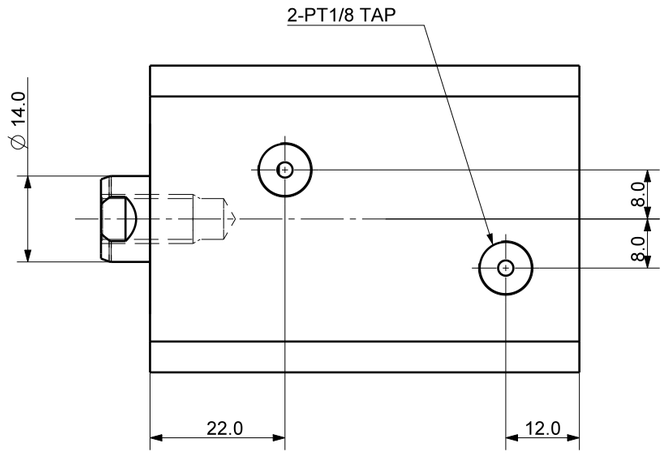

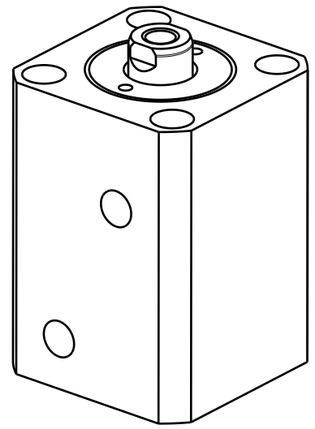

Isometric view (3:4)

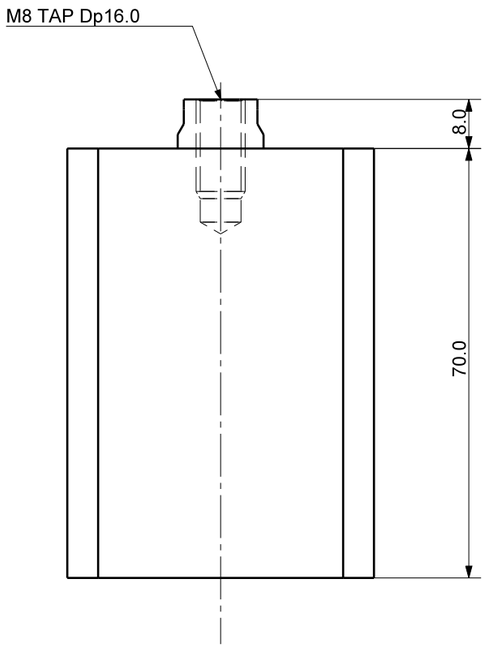

DET.NO	NAME	Q'TY	MAT'L	FINAL SIZES & PART No	REMARK

UNLESS OTHERWISE SPECIFIED	SIGNATURES	MO-DA-YR
DIMENSIONS ARE IN MM	DRAWN JHB	10-11-11
ALL SURFACES 6.3S	CHECKED	
TOLERANCES	APPROVED	
ANGLE ±		
X. ±		
.X ± 0.15		
.XX ±		

KJF 케이제이에프(주)
TOTAL CLAMPING SYSTEMS

TITLE

BLOCK CLAMP

FINISH BLOCK OXIDE	WORK ORDER NO	REF DWG NO. ---
HEAT TREAT HRC18~22		DWG NO BDV-2525_-
		SCALE /

A3

TOOL ☐ PART ☐ SHEET OF