FILE NAME:

REVISIONS				
ZONE	LTR	DESCRIPTION	DATE	APPROVED

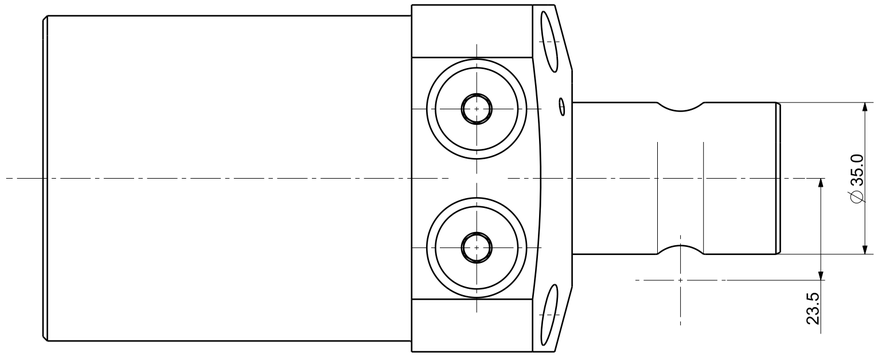

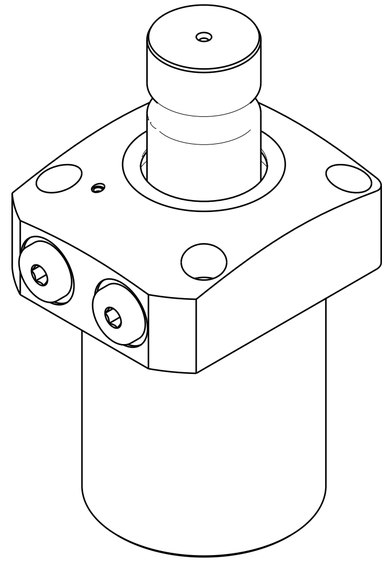

Isometric view (3:4)

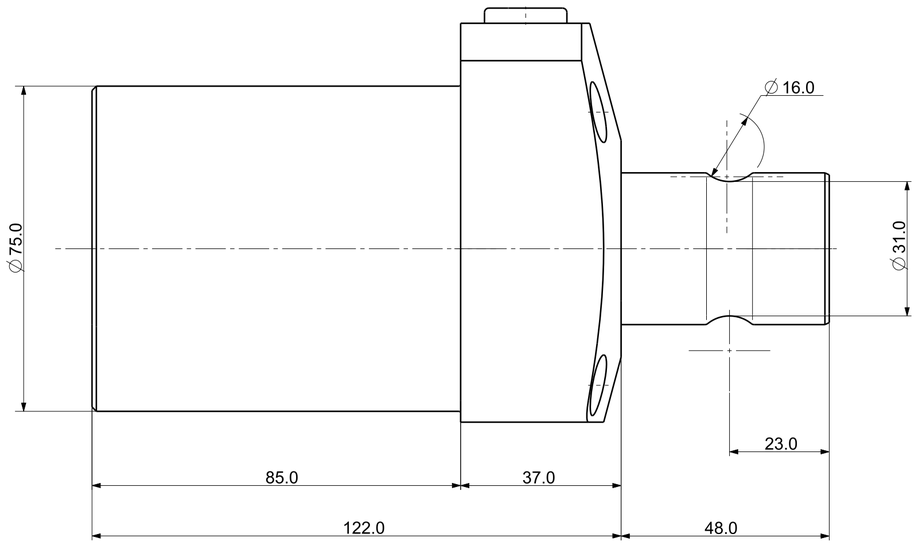

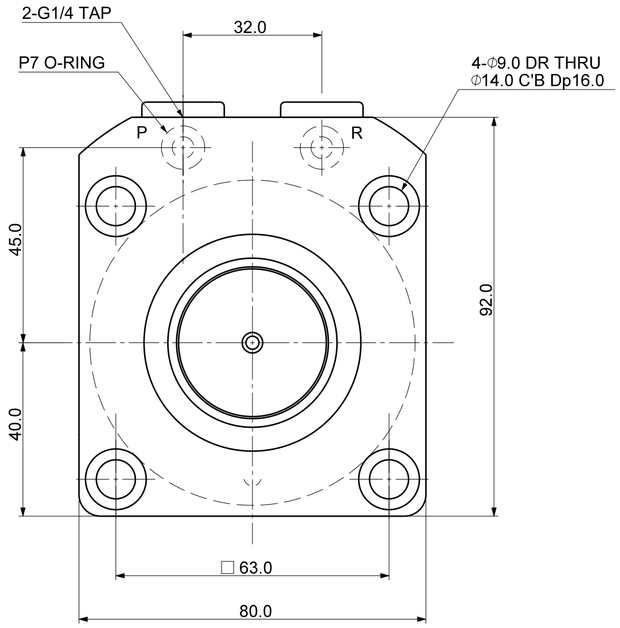

NOTE
1. MODEL No : CSDR-6028GQ
1. PISTON DIA : Φ60.0
2. ROD DIA : Φ35.0
3. STROKE = 28.0mm(Straight : 12.0 mm+Swing : 16.0 mm)
4. OPERATING PRESSURE : 20~70 Kg/Cm^2)
5. OPERATING TEMPERATURE : 0 ~ 60 ℃

UNLESS OTHERWISE SPECIFIED	SIGNATURES	MO-DA-YR	(주)케이제이에프 TOTAL CLAMPING SYSTEMS
DIMENSIONS ARE IN MM	DRAWN		TITLE
ALL SURFACES 6.3s	CHECKED		HYD SWING CLAMP
TOLERANCES ANGLE ± X. ± .X ± 0.15 .XX ±	APPROVED		
FINISH	WORK ORDER NO	REF DWG NO. -	DWG NO CSDR-6028GQ — A2
HEAT TREAT		SCALE	TOOL ☐ PART ☐ SHEET OF