FILE NAME:

REVISIONS				
ZONE	LTR	DESCRIPTION	DATE	APPROVED

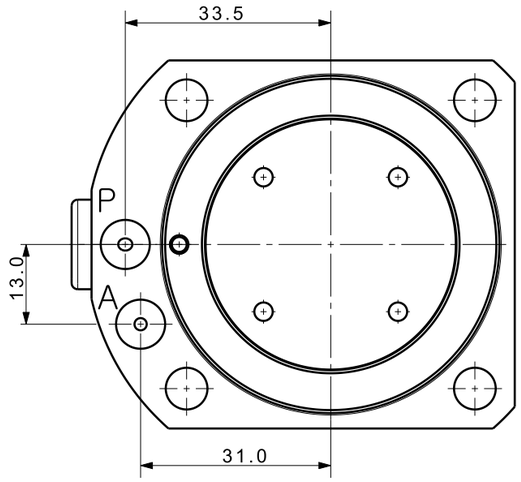

View C (1:1)

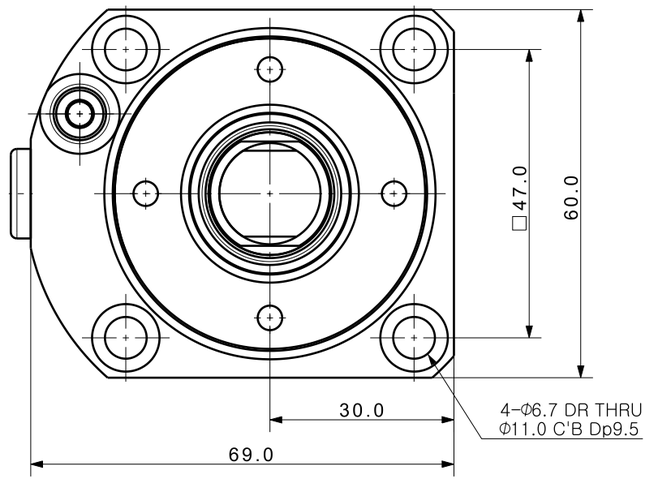

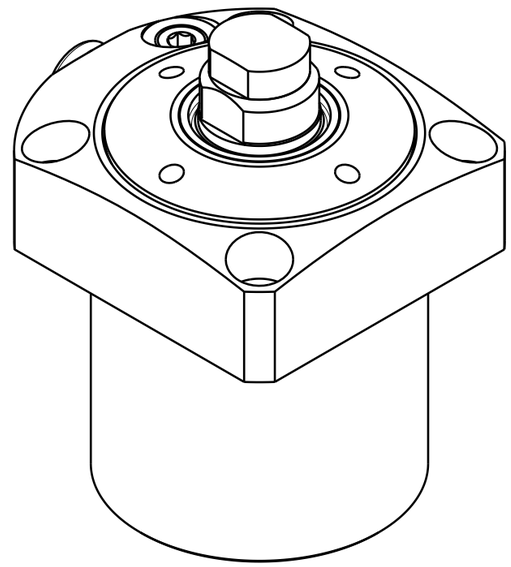

Isometric view (1:1)

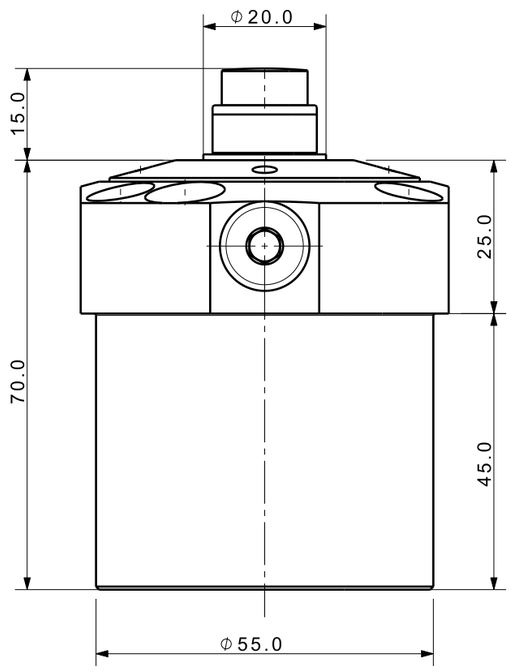

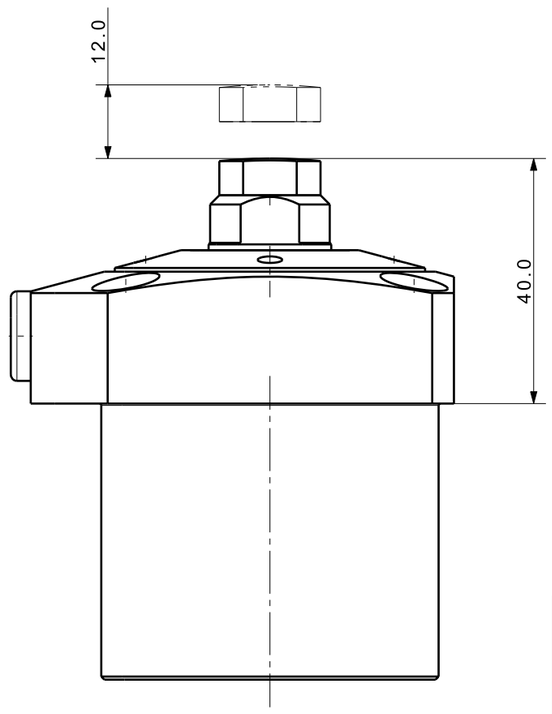

"C"

NOTE

1. MODEL No : CWS-20122FG
2. PLUNGER STROKE : 12.0 mm
3. OPERATING PRESSURE : 25 ~70 Kgf/cm^2
4. OPERATING TEMPERATYRE : 0 ~ 60℃
5. HYDRAULIC ADVANCE TYPE

DET.NO	NAME	Q'TY	MAT'L	FINAL SIZES & PART No	REMARK

UNLESS OTHERWISE SPECIFIED	SIGNATURES	MO-DA-YR
DIMENSIONS ARE IN MM	DRAWN	
ALL SURFACES 6.3S	CHECKED	
TOLERANCES	APPROVED	
ANGLE ±		
X. ±		
.X ± 0.15		
.XX ±		
FINISH	WORK ORDER NO	
HEAT TREAT		

KJF 케이제이에프(주)
TOTAL CLAMPING SYSTEMS

TITLE

WORK SUPPORT

REF DWG NO.	DWG NO	
---	CWS-20122FG_-	A3
SCALE /	TOOL ☐ PART ☐	SHEET OF