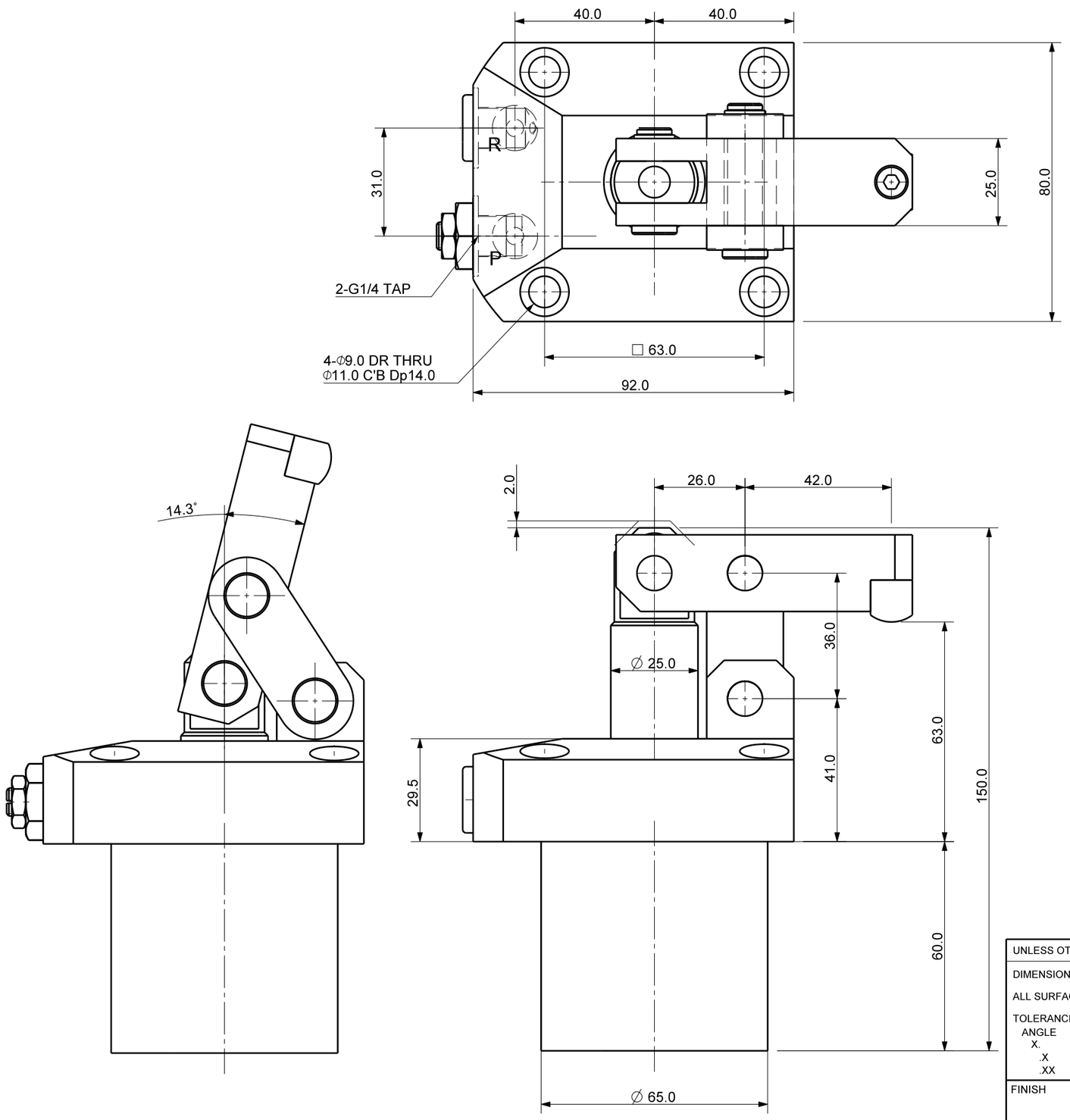

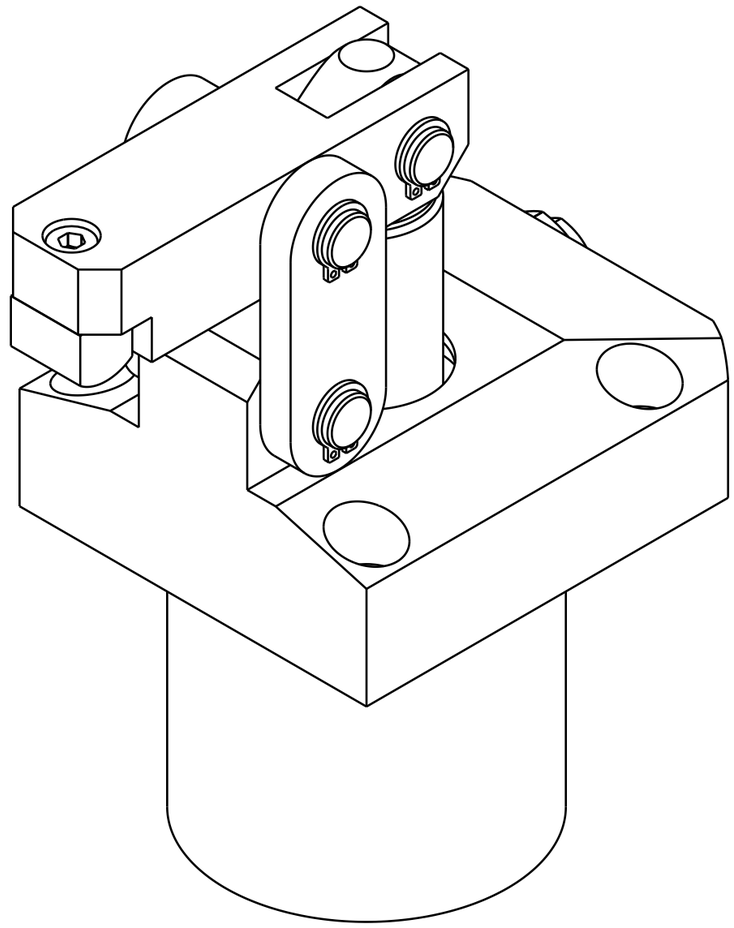

Isometric view (1:1)

UNLESS OTHERWISE SPECIFIED	SIGNATURES	MO-DA-YR	(주)케이제이에프 TOTAL CLAMPING SYSTEMS
DIMENSIONS ARE IN MM	DRAWN JHB	02-12-15	
ALL SURFACES	CHECKED		TITLE
TOLERANCES ANGLE ± X. ± .X ± .XX ±	APPROVED		HINGE CLAMP
FINISH	WORK ORDER NO	REF DWG NO. ---	DWG NO HGC-4005GV A3
HEAT TREAT		SCALE /	TOOL ☐ PART ☐ SHEET OF

FILE NAME: