FILE NAME:

REVISIONS				
ZONE	LTR	DESCRIPTION	DATE	APPROVED

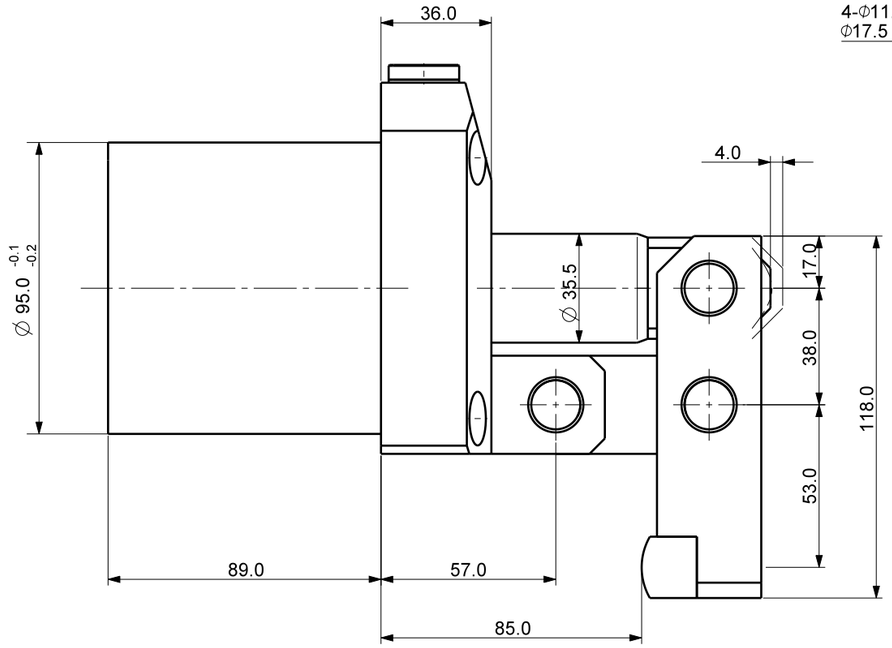

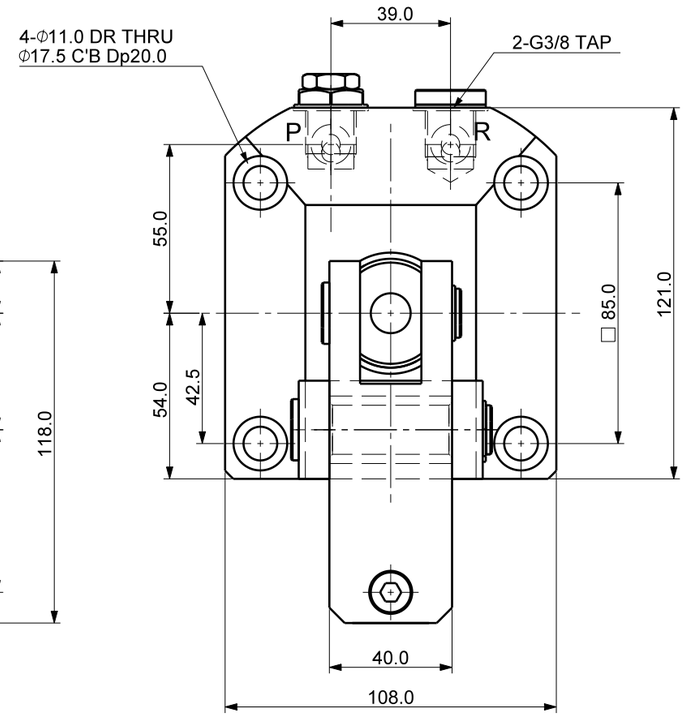

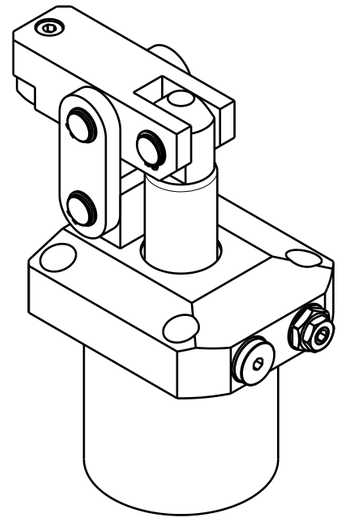

Isometric view (1:3)

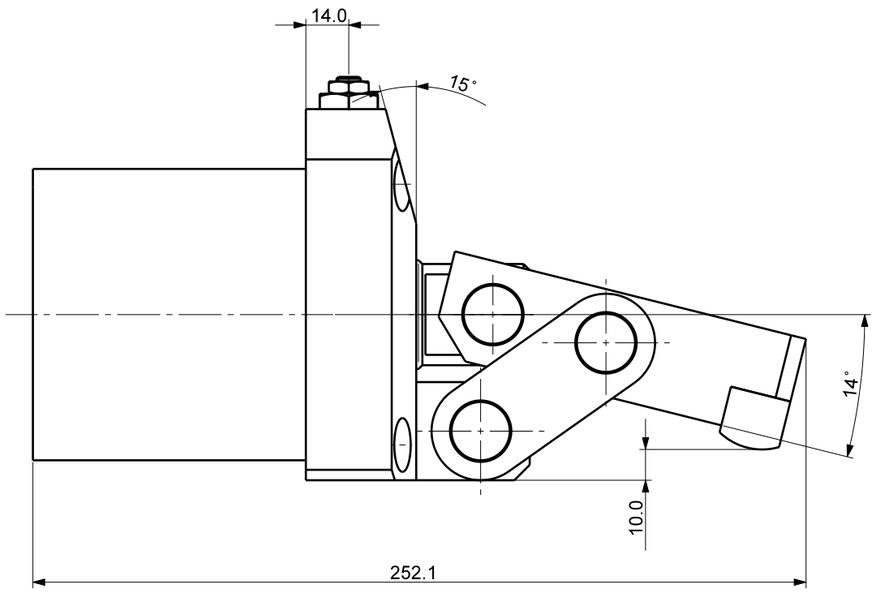

UNLESS OTHERWISE SPECIFIED	SIGNATURES	MO-DA-YR
DIMENSIONS ARE IN MM	DRAWN	
ALL SURFACES	CHECKED	
TOLERANCES ANGLE ± X. ± .X ± .XX ±	APPROVED	
FINISH	WORK ORDER NO	
HEAT TREAT		

(주)케이제이에프
TOTAL CLAMPING SYSTEMS

TITLE

HINGE CLAMP

REF DWG NO.	DWG NO	
---	HGC-6315GV	A3
SCALE /	TOOL □ PART □	SHEET OF