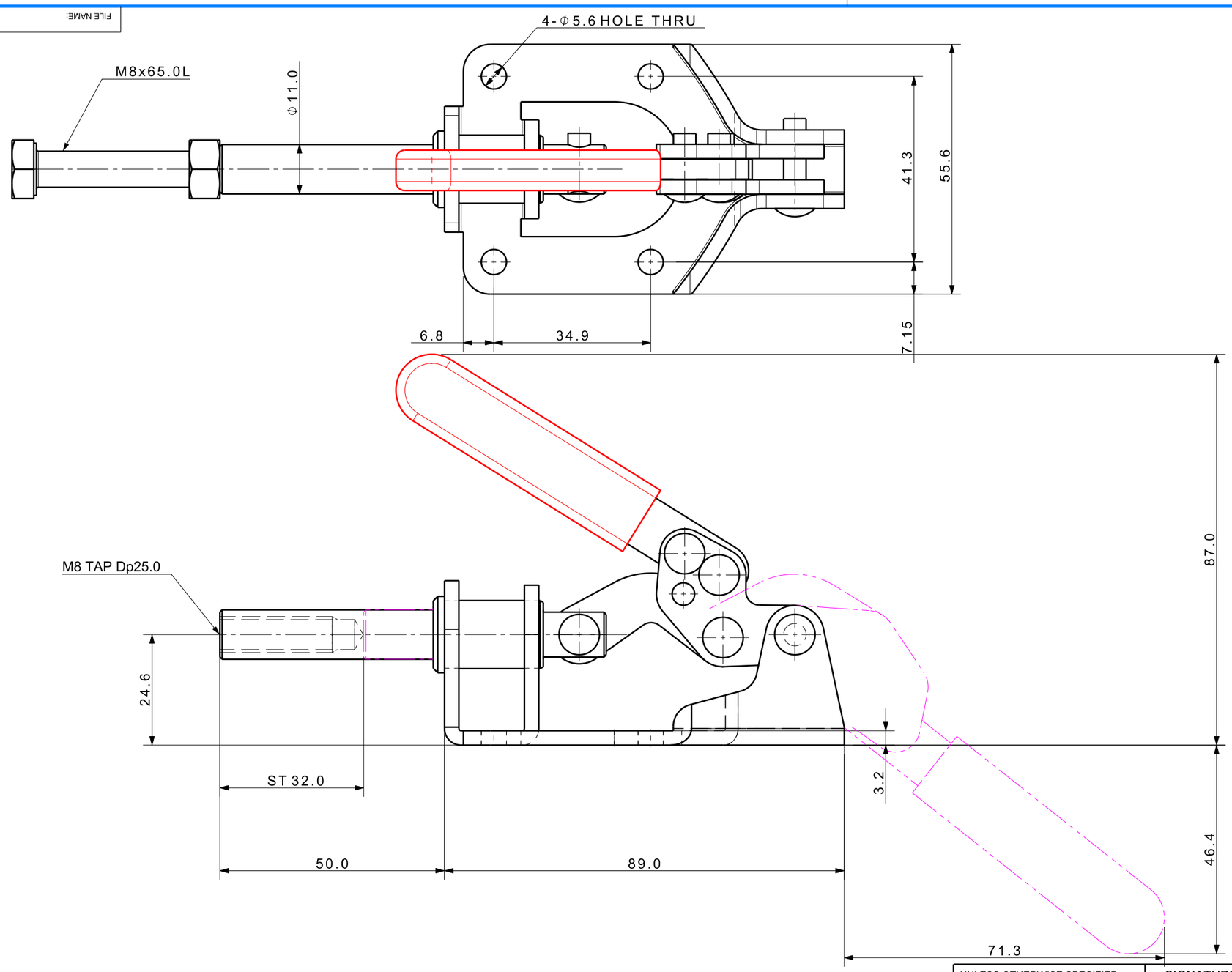

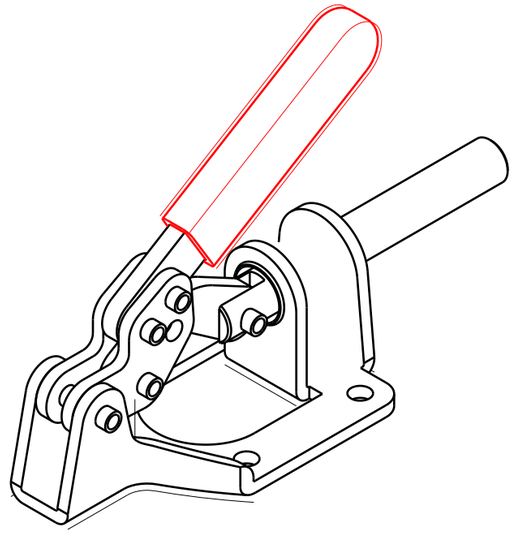

Isometric view (3:4)

UNLESS OTHERWISE SPECIFIED	SIGNATURES	MO-DA-YR	(주)케이제이에프 TOTAL CLAMPING SYSTEMS
DIMENSIONS ARE IN MM	DRAWN		TITLE
ALL SURFACES	CHECKED		TOGGLE CLAMP (PUSH / PULL CLAMP)
TOLERANCES ANGLE ± X. ± .X ± .XX ±	APPROVED		
FINISH	WORK ORDER NO	REF DWG NO. ---	DWG NO KJF-014-31F A3
HEAT TREAT		SCALE /	TOOL ☐ PART ☐ SHEET OF