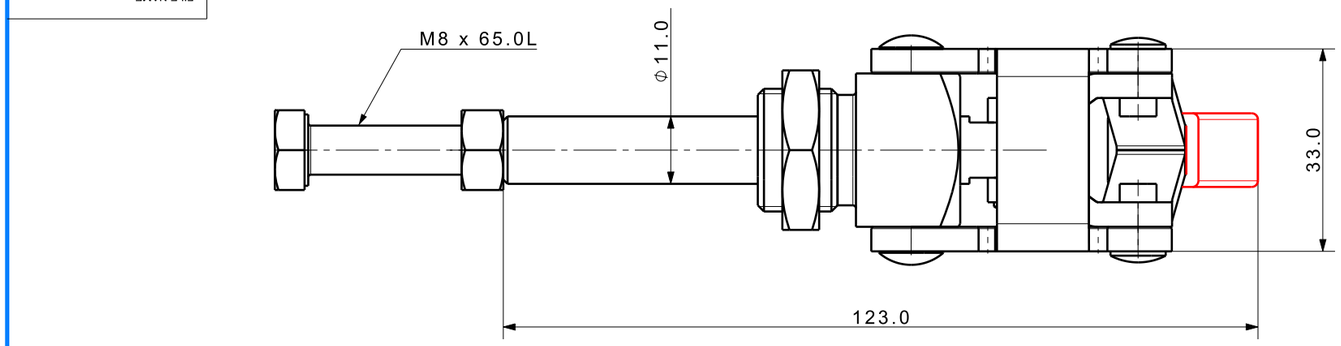

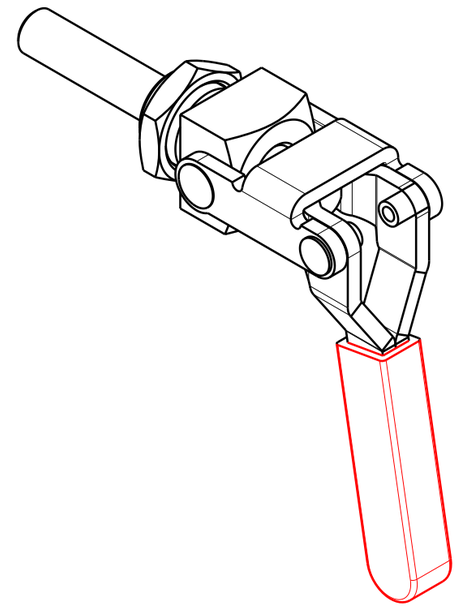

Isometric view (3:4)

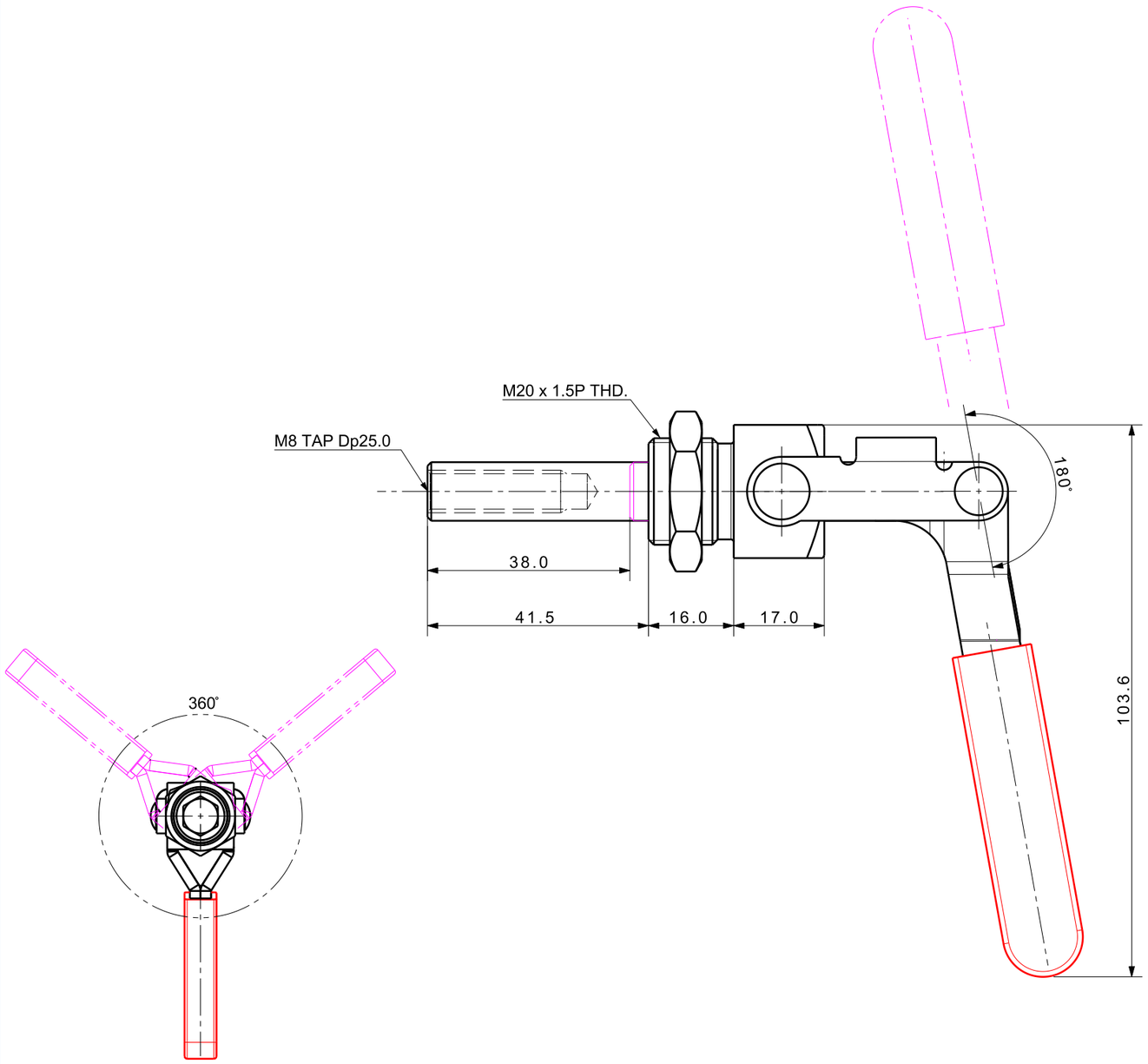

UNLESS OTHERWISE SPECIFIED DIMENSIONS ARE IN MM ALL SURFACES TOLERANCES ANGLE ± X. ± .X ± .XX ±	SIGNATURES	MO-DA-YR	(주)케이제이에프 TOTAL CLAMPING SYSTEMS
	DRAWN		TITLE TOGGLE CLAMP PUSH/PULL Type
	CHECKED		
	APPROVED		
FINISH --	WORK ORDER NO		REF DWG NO. ---
HEAT TREAT --			DWG NO KJF-015-31F
			A3
			SCALE / TOOL ☐ PART ☐ SHEET OF