FILE NAME:

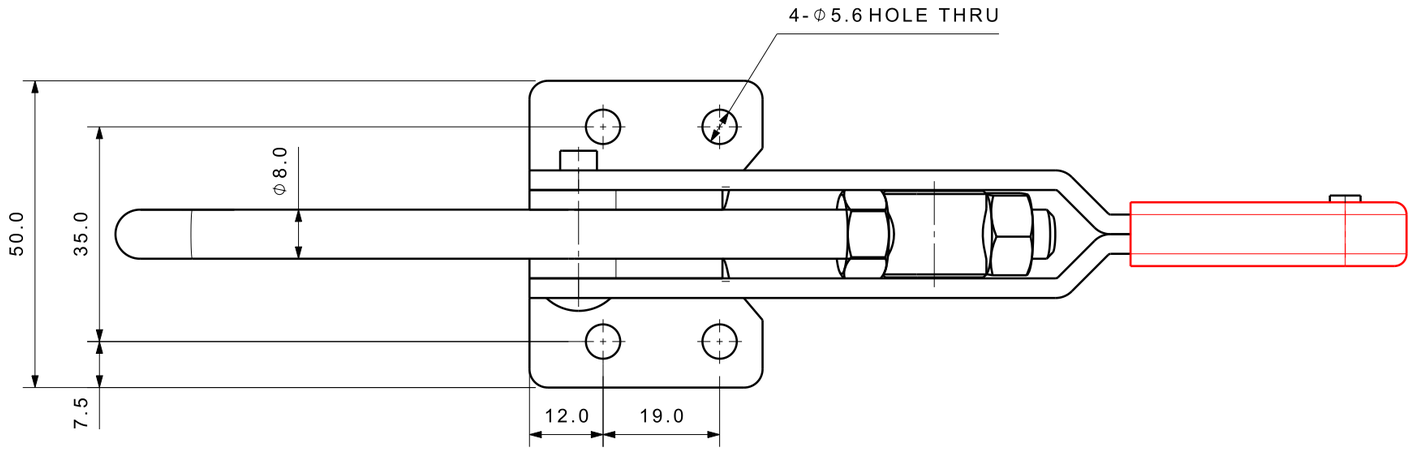

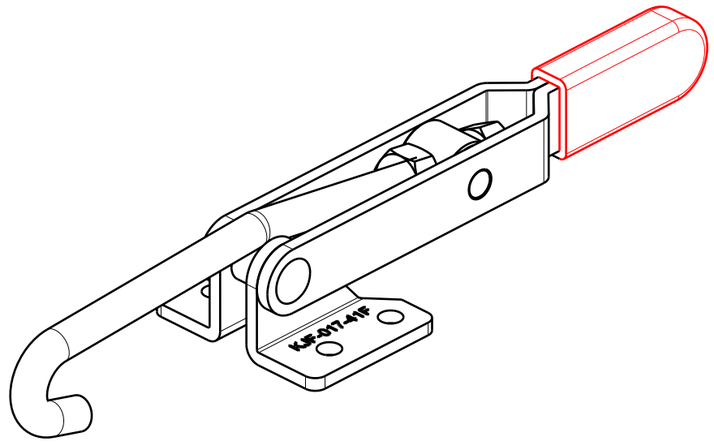

Isometric view 3:4

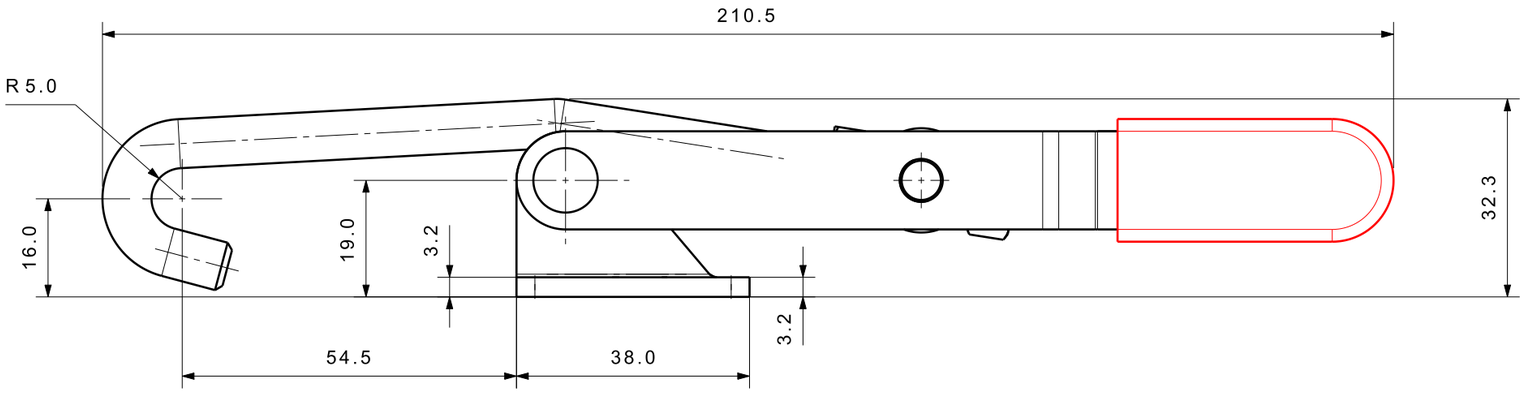

UNLESS OTHERWISE SPECIFIED	SIGNATURES	MO-DA-YR	(주)케이제이에프 TOTAL CLAMPING SYSTEMS
DIMENSIONS ARE IN MM	DRAWN		
ALL SURFACES	CHECKED		TITLE
TOLERANCES ANGLE ± X. ± .X ± .XX ±	APPROVED		TOGGLE CLAMP (LATCH TYPE)
FINISH ---	WORK ORDER NO		REF DWG NO. --- DWG NO KJF- 017-41F A3
HEAT TREAT ---			SCALE / TOOL ☐ PART ☐ SHEET OF