FILE NAME:

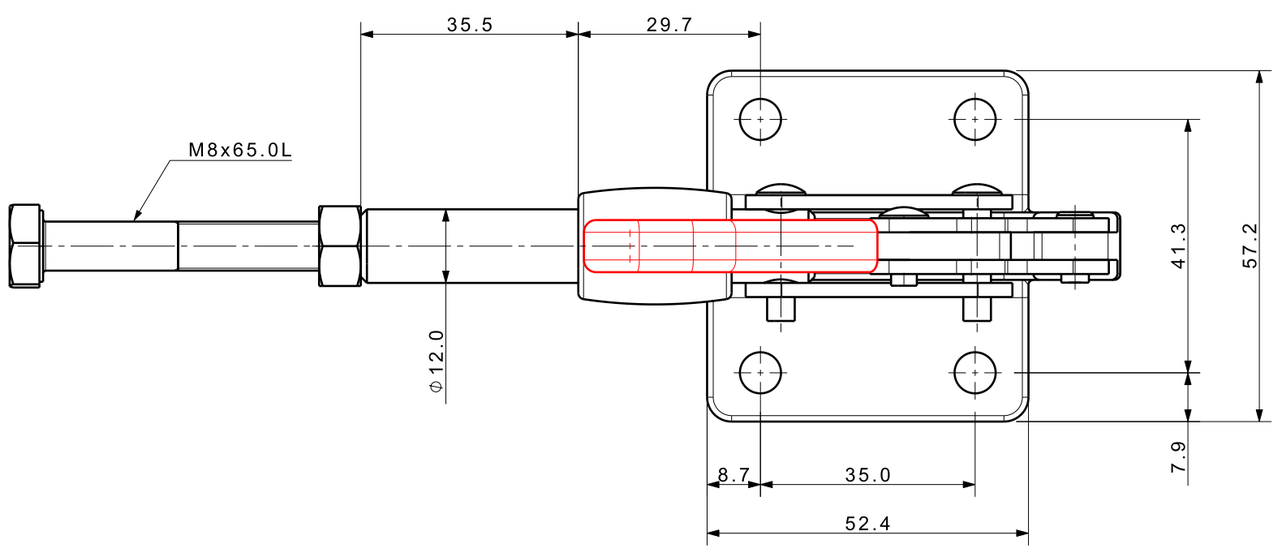

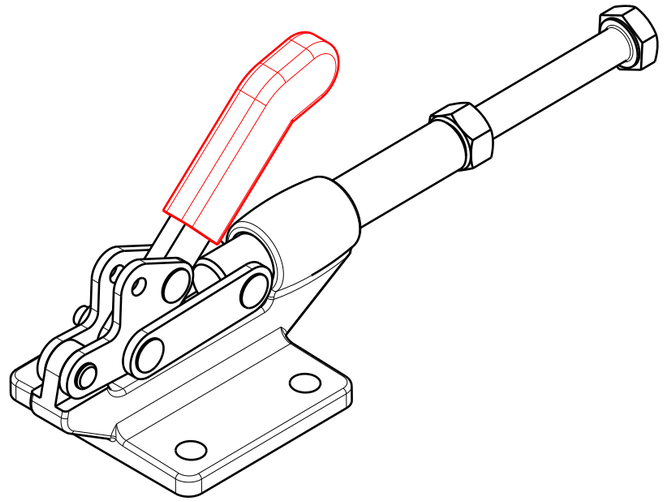

Isometric view (3:4)

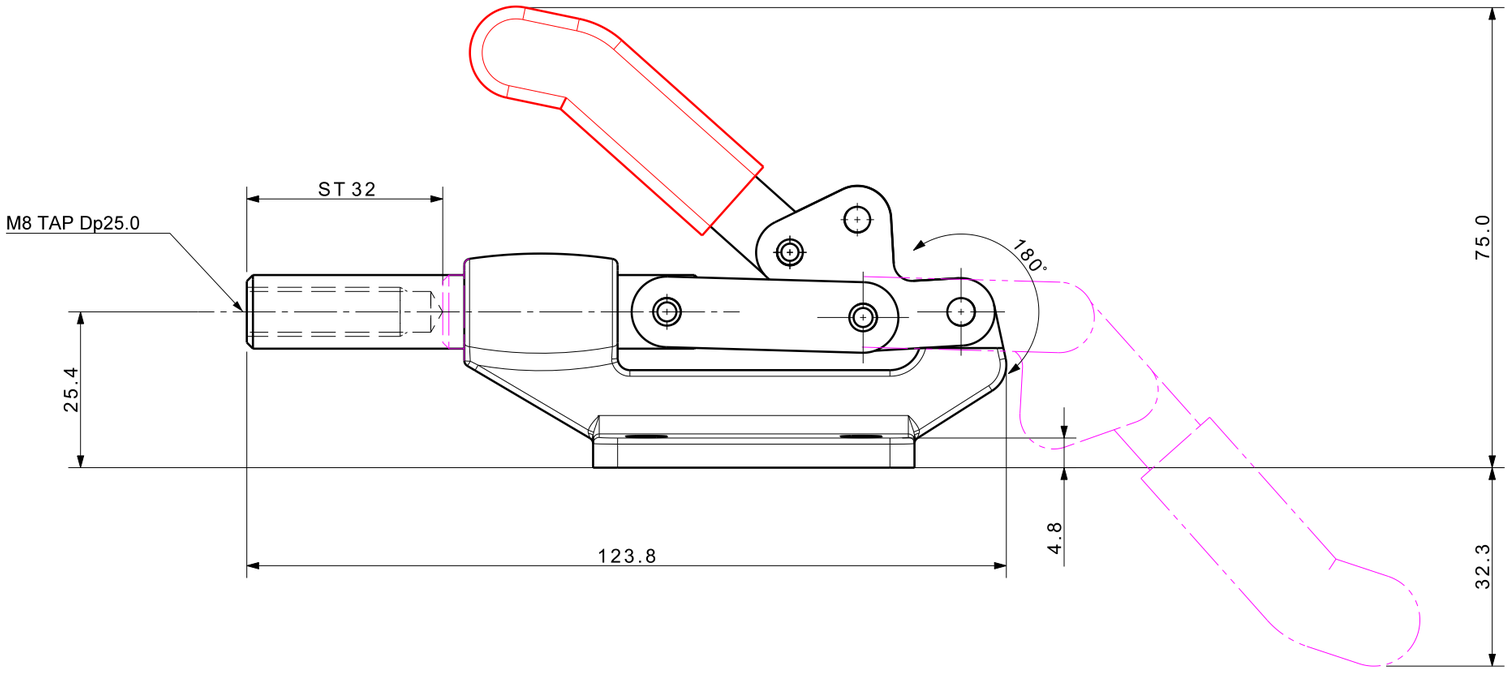

UNLESS OTHERWISE SPECIFIED	SIGNATURES	MO-DA-YR
DIMENSIONS ARE IN MM	DRAWN	
ALL SURFACES 6.3S	CHECKED	
TOLERANCES ANGLE ± X. ± .X ± 0.15 .XX ±	APPROVED	
FINISH ---	WORK ORDER NO	
HEAT TREAT ---		

(주)케이제이에프
TOTAL CLAMPING SYSTEMS

TITLE

TOGGLE CLAMP
PUSH/PULL TYPE

REF DWG NO.	DWG NO	
---	KJF- 023-31FD	A3
SCALE /	TOOL ☐ PART ☐	SHEET OF