FILE NAME:

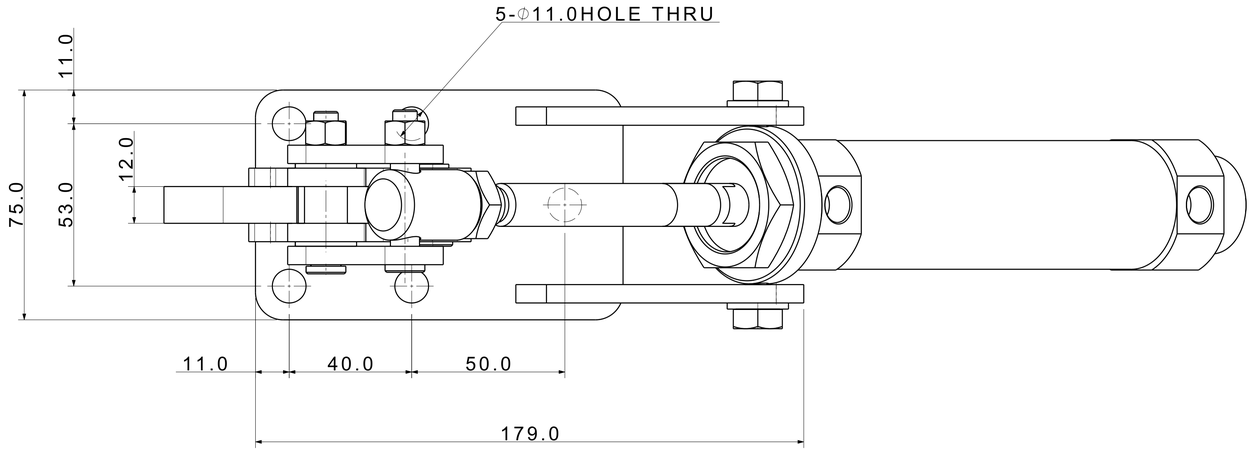

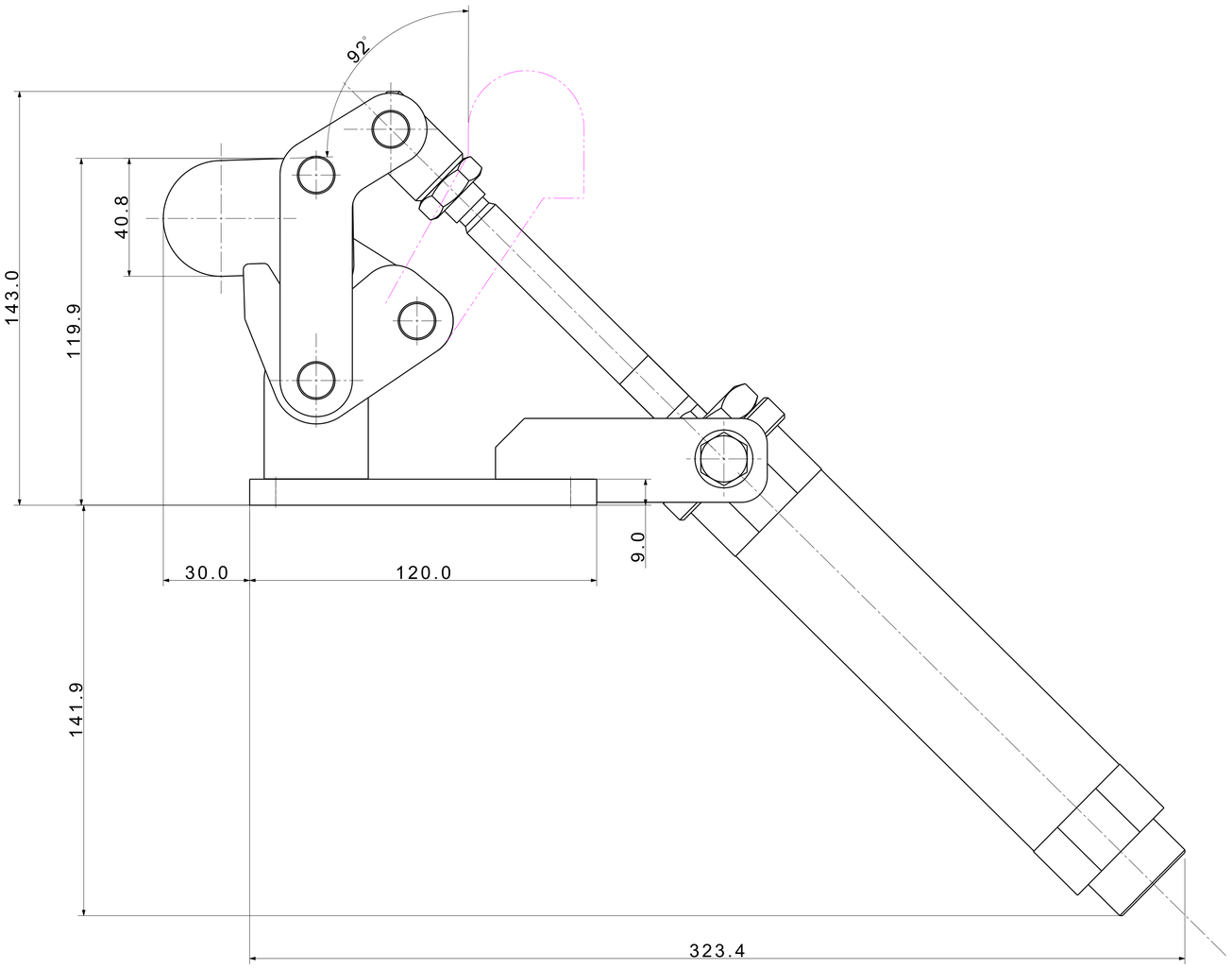

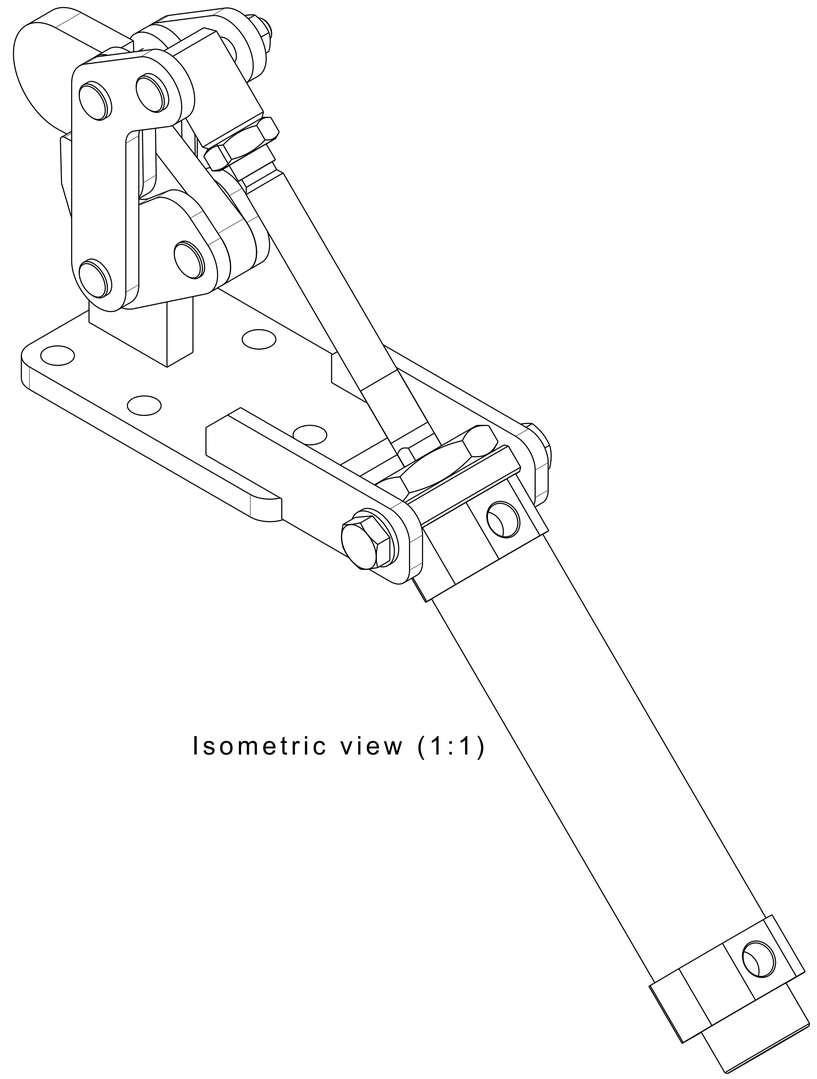

Isometric view (1:1)

Holding Capacity(Kg)	1000	Spindle Adjust(mm)	N/A
Weight(g)	2940	Air Port Size	PT1/4
Arm Move	187°	Cylinder Size	Φ40X100(ST)

UNLESS OTHERWISE SPECIFIED

DIMENSIONS ARE IN MM

ALL SURFACES 6.3s

TOLERANCES
ANGLE ±
X. ±
.X ± 0.15
.XX ± 0.05

FINISH

HEAT TREAT

SIGNATURES	MO-DA-YR
DRAWN ----	
CHECKED	
APPROVED	

WORK ORDER NO

(주)케이제이에프
TOTAL CLAMPING SYSTEMS

TITLE
TOGGLE CLAMP (AIR TYPE)

REF DWG NO. -

DWG NO KJF- AR-702

A1

SCALE

TOOL ☐ PART ☐ SHEET OF