FILE NAME:

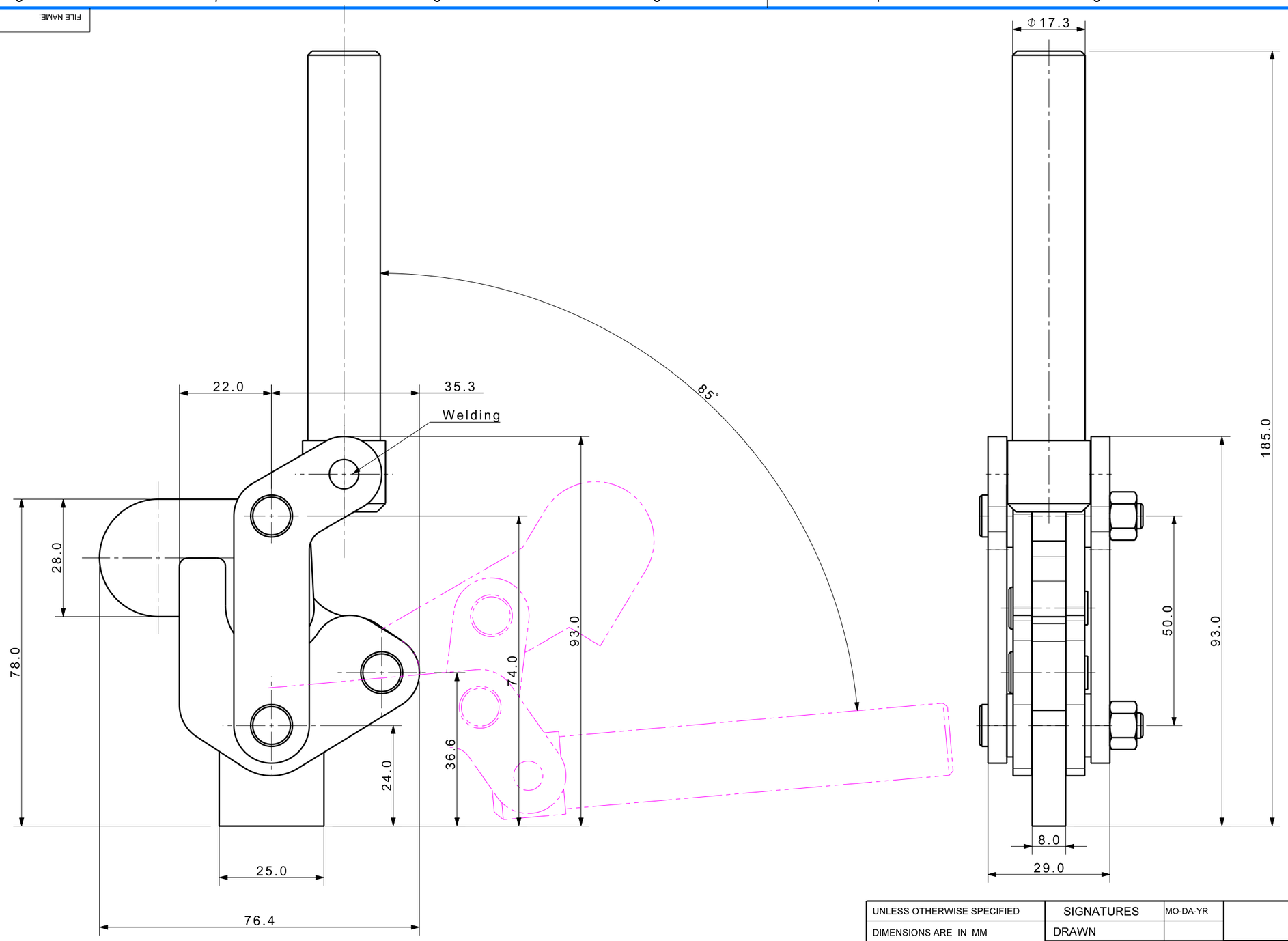

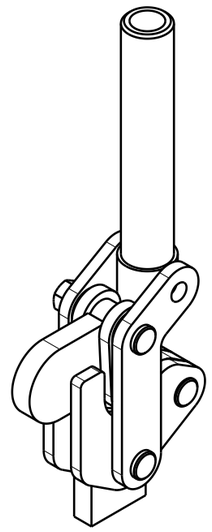

Isometric view (1:2)

UNLESS OTHERWISE SPECIFIED	SIGNATURES	MO-DA-YR
DIMENSIONS ARE IN MM	DRAWN	
ALL SURFACES	CHECKED	
TOLERANCES ANGLE ± X. ± .X ± .XX ±	APPROVED	
FINISH	WORK ORDER NO	
HEAT TREAT		

(주)케이제이에프
TOTAL CLAMPING SYSTEMS

TITLE

TOGGLE CLAMP
Heavy Duty Weldable Type

REF DWG NO. ---	DWG NO KJF- VR-01	A3
SCALE /	TOOL ☐ PART ☐	SHEET OF