FILE NAME

REVISIONS				
ZONE	LTR	DESCRIPTION	DATE	APPROVED

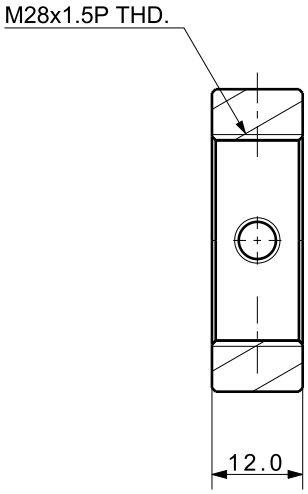

Section view A-A (1:1)

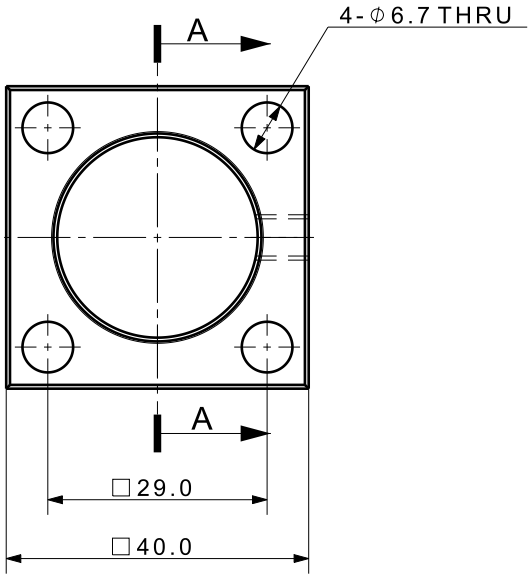

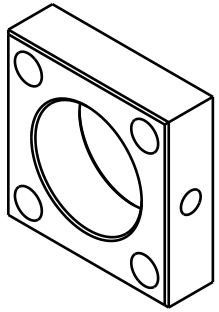

Isometric view (3:4)

DET.NO	NAME	Q'TY	MAT'L	FINAL SIZES & PART No	REMARK
	MBS-2812_-	1	S45C	□40.0 x 12.0	

UNLESS OTHERWISE SPECIFIED	SIGNATURES	MO-DA-YR
DIMENSIONS ARE IN MM	DRAWN JHB	06-10-15
ALL SURFACES 6.3S	CHECKED	
TOLERANCES	APPROVED	
ANGLE ±		
X. ±		
.X ± 0.15		
.XX ± 0.05		

케이제이에프(주)
TOTAL CLAMPING SYSTEMS

TITLE

Mounting Accessories

FINISH BLOCK OXIDE	WORK ORDER NO	REF DWG NO. ---
HEAT TREAT HRC18~22		SCALE /

DWG NO MBS-2812_- A4

TOOL □ PART □ SHEET OF