FILE NAME:

REVISIONS				
ZONE	LTR	DESCRIPTION	DATE	APPROVED

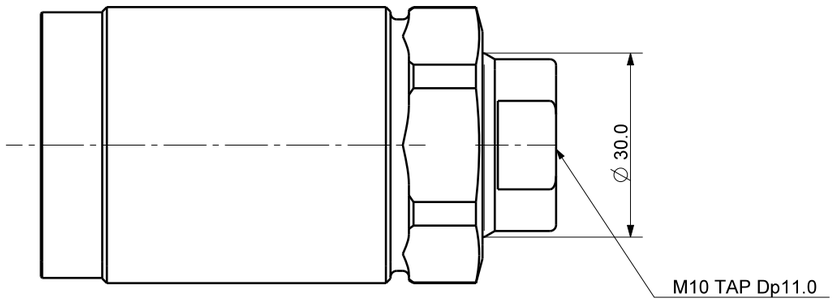

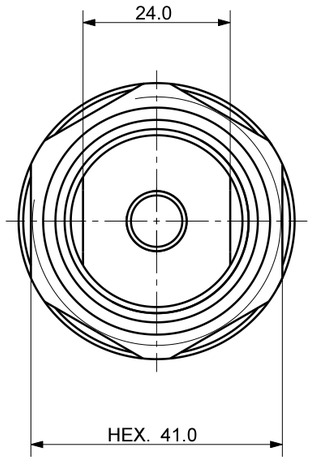

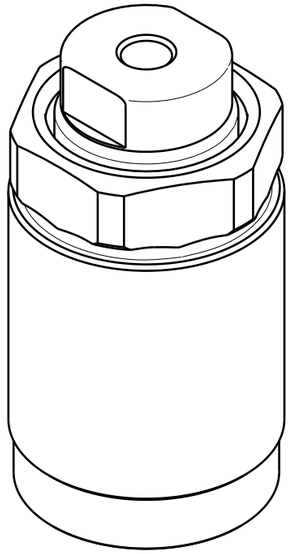

Isometric view (1:1)

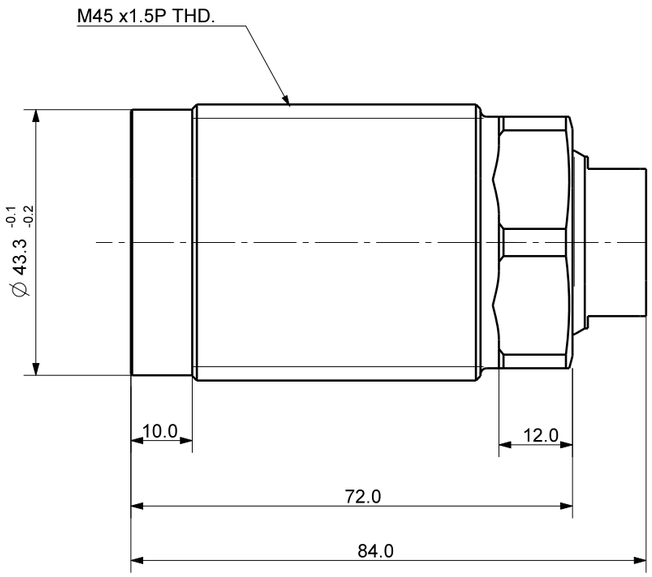

주 기)

1. 유효단면적 : 7.06 Cm^2
2. STROKE = 20.0 mm
3. CYLINDER Capacity : 14.13 Cm^3

DET.NO	NAME	Q'TY	MAT'L	FINAL SIZES & PART No	REMARK

UNLESS OTHERWISE SPECIFIED	SIGNATURES	MO-DA-YR
DIMENSIONS ARE IN MM	DRAWN OK Y.S	07-21-14
ALL SURFACES 6.3S	CHECKED	
TOLERANCES	APPROVED	
ANGLE ±		
X. ±		
.X ± 0.15		
.XX ±		
FINISH BLOCK OXIDE	WORK ORDER NO	
HEAT TREAT HRC18~22		

케이제이에프(주)
TOTAL CLAMPING SYSTEMS

TITLE

MANIFOLD TYPE THD. BODY CLAMP

REF DWG NO.	DWG NO	
---	MTB-3020G_-	A3
SCALE /	TOOL ☐ PART ☐	SHEET OF