| REVISIONS | | | | |
|---|---|---|---|---|
| ZONE | LTR | DESCRIPTION | DATE | APPROVED |

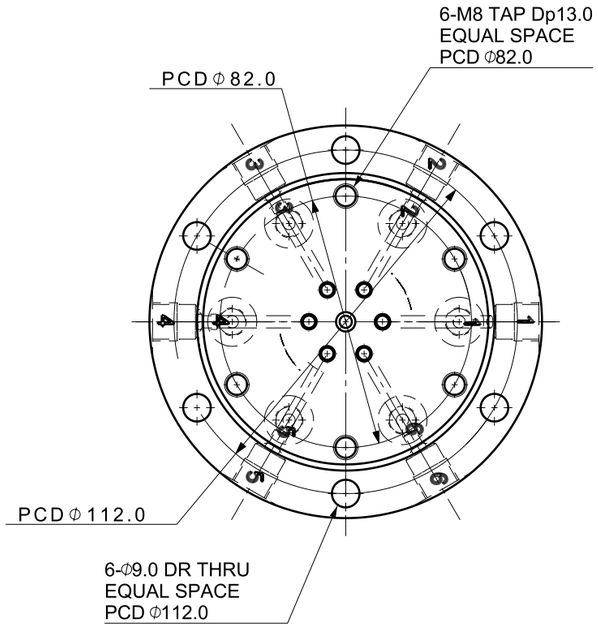


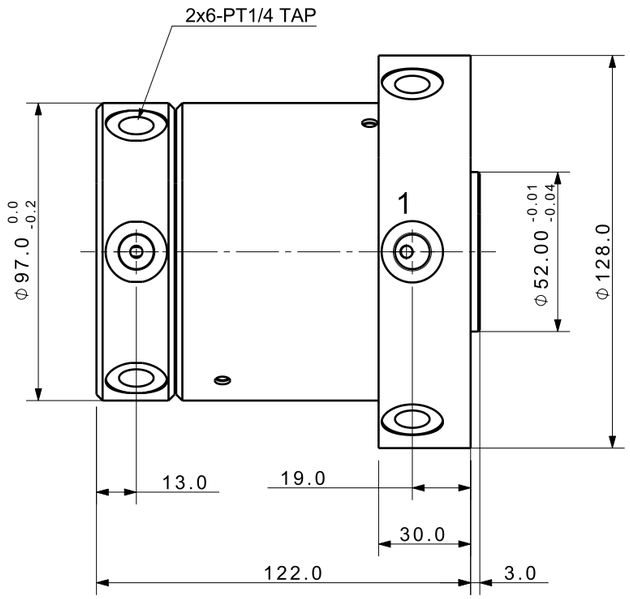


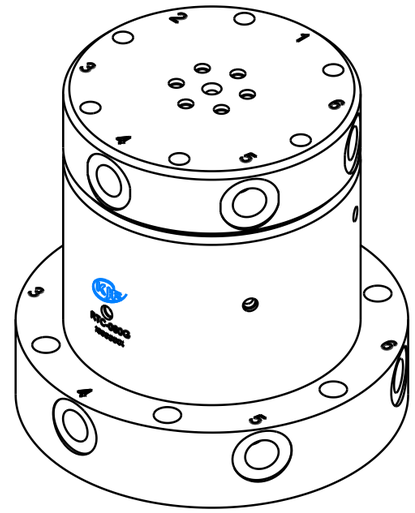

Isometric view (1:2)

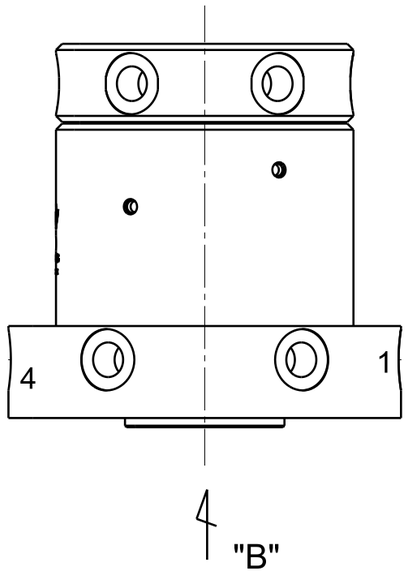


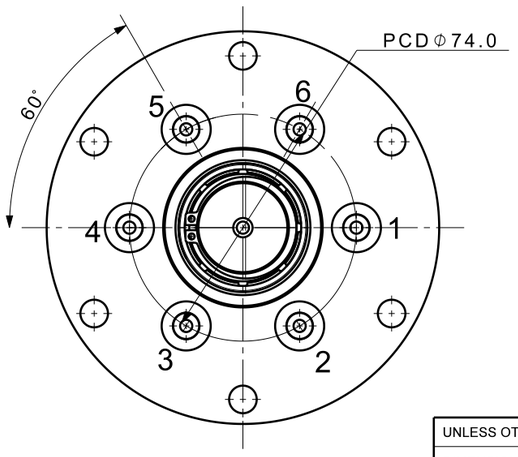


View "B" (1:2)

주 기)
1. 최고사용 압력 : 72 Kg/Cm$^2$
2. 허용회전속도 : 200 MIN
3. 사용온도 : −10~70 ℃
4. 사용유체 : ISO−VG32 or AIR

| DET.NO | NAME | Q'TY | MAT'L | FINAL SIZES & PART No | REMARK |
|---|---|---|---|---|---|

| | | |
|---|---|---|
| UNLESS OTHERWISE SPECIFIED | SIGNATURES | MO-DA-YR |
| DIMENSIONS ARE IN MM | DRAWN OK Y.S | 05-31-14 |
| ALL SURFACES 6.3S | CHECKED | |
| TOLERANCES | APPROVED | |
| ANGLE ± | | |
| X. ± | | |
| .X ± 0.15 | | |
| .XX ± | | |

케이제이에프(주)
TOTAL CLAMPING SYSTEMS

TITLE

# ROTARY JOINT

| | |
|---|---|
| FINISH | BLOCK OXIDE |
| HEAT TREAT | --- |
| WORK ORDER NO | |
| REF DWG NO. | --- |
| DWG NO | RTC-060_- |
| A3 | |
| SCALE | 1/2 |
| TOOL ☐ PART ☐ | SHEET OF |