FILE NAME:

REVISIONS				
ZONE	LTR	DESCRIPTION	DATE	APPROVED

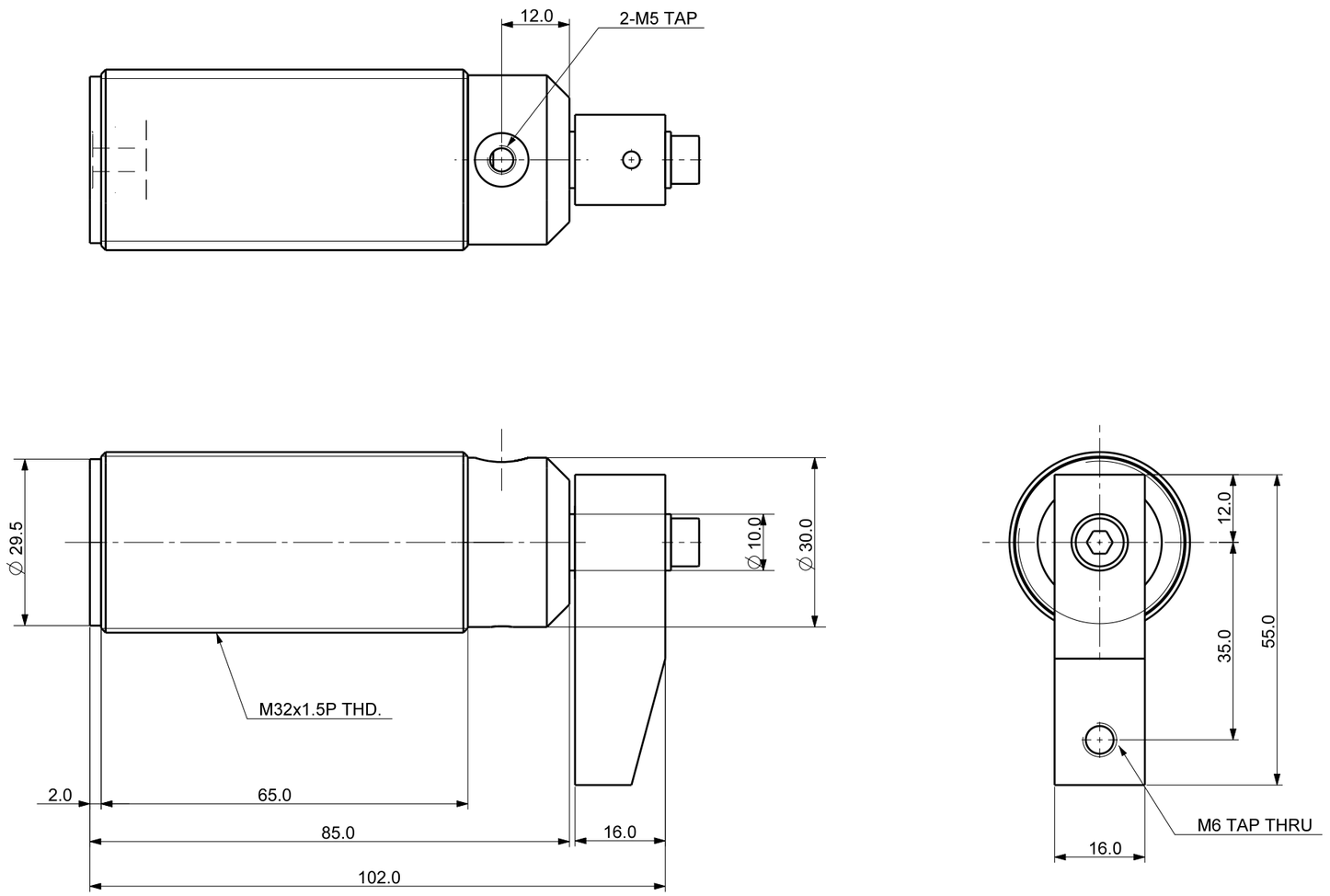

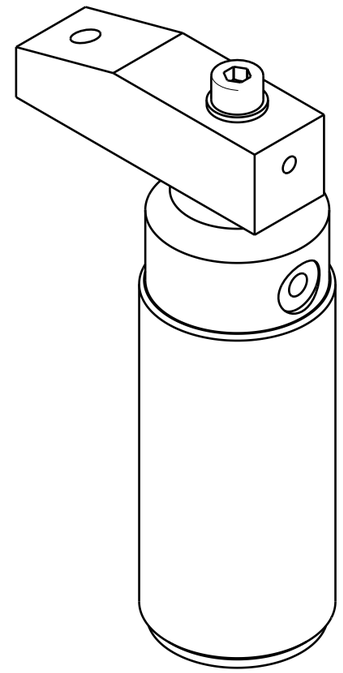

Isometric view (1:1)

NOTE
1. STROKE : 18.0 mm
직진 : 10.0 mm
회전 : 8.0 mm

DET.NO	NAME	Q'TY	MAT'L	FINAL SIZES	REMARK

UNLESS OTHERWISE SPECIFIED	SIGNATURES	MO-DA-YR
DIMENSIONS ARE IN MM	DRAWN	
ALL SURFACES 6.3S	CHECKED	
TOLERANCES	APPROVED	
ANGLE ±		
X. ±		
.X ± 0.15		
.XX ±		
FINISH	WORK ORDER NO	
HEAT TREAT		

KJF 케이제이에프(주)
TOTAL CLAMPING SYSTEMS

TITLE

AIR SWING CLAMP

REF DWG NO.	DWG NO	
	SDx-2518A	A3
SCALE /	TOOL ☐ PART ☐	SHEET OF