FILE NAME:

REVISIONS				
ZONE	LTR	DESCRIPTION	DATE	APPROVED

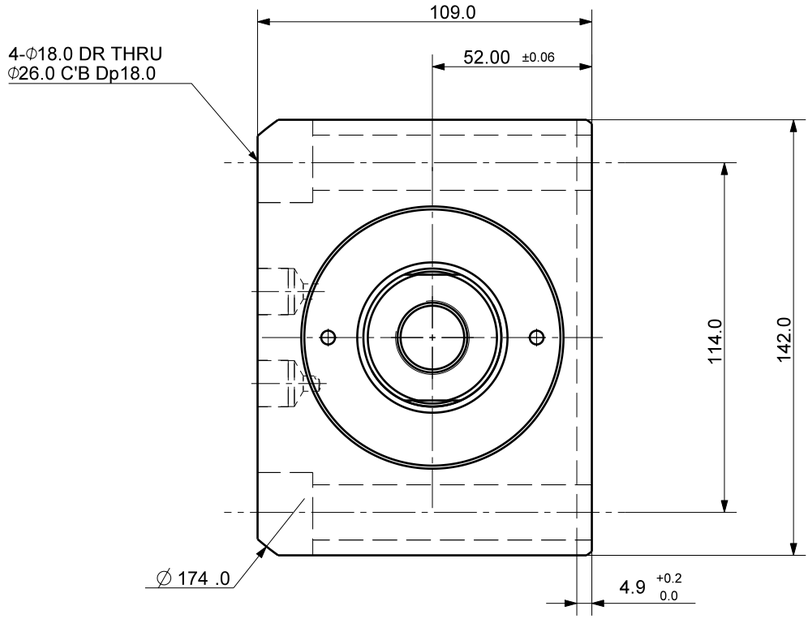

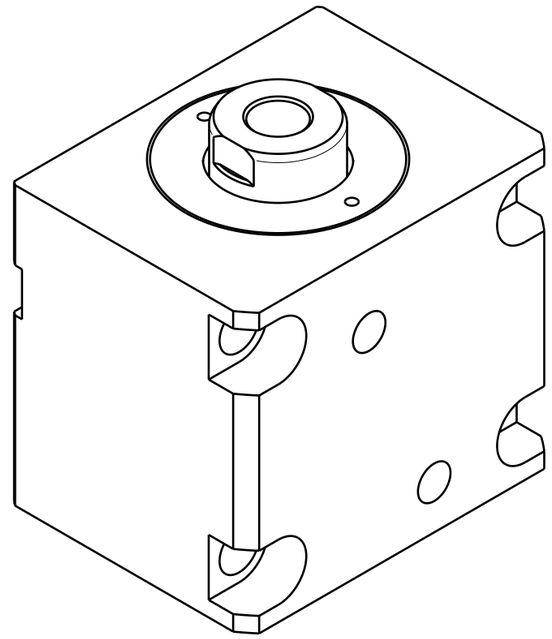

Isometric view (1:2)

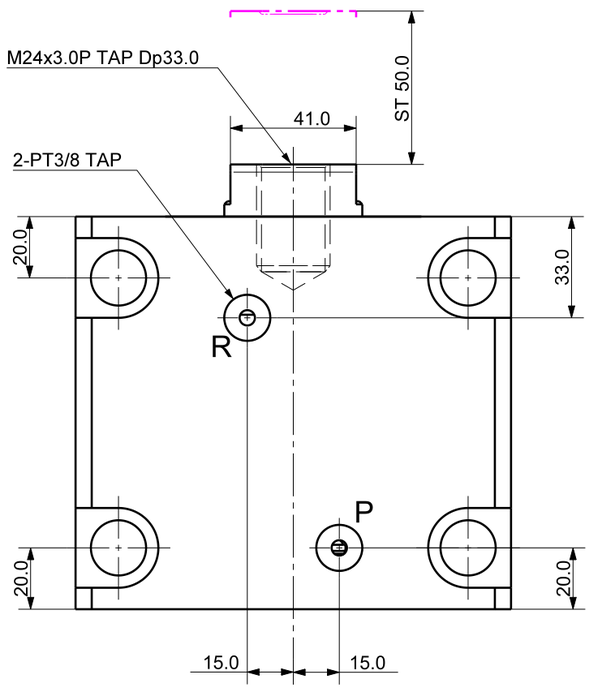

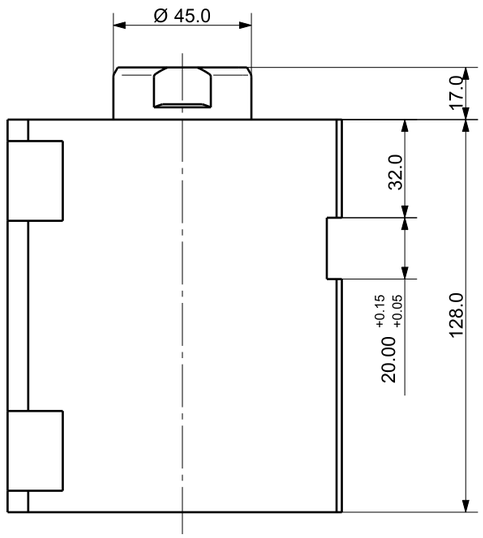

DET.NO	NAME	Q'TY	MAT'L	FINAL SIZES & PART No	REMARK

UNLESS OTHERWISE SPECIFIED	SIGNATURES	MO-DA-YR
DIMENSIONS ARE IN MM	DRAWN J.Y.H	10-29-25
ALL SURFACES 6.3S	CHECKED Y.S.J	10-29-25
TOLERANCES	APPROVED OK.Y.S	10-29-25
ANGLE ±		
X. ±		
.X ± 0.15		
.XX ±		

KJF 케이제이에프(주)
TOTAL CLAMPING SYSTEMS

TITLE

BLOCK CLAMP

FINISH	WORK ORDER NO	REF DWG NO.	DWG NO	
BLOCK OXIDE		---	BDH-8050_-	A3
HEAT TREAT HRC18~22		SCALE /	TOOL ☐ PART ☐	SHEET OF