FILE NAME:

| REVISIONS | | | | |
|---|---|---|---|---|
| ZONE | LTR | DESCRIPTION | DATE | APPROVED |

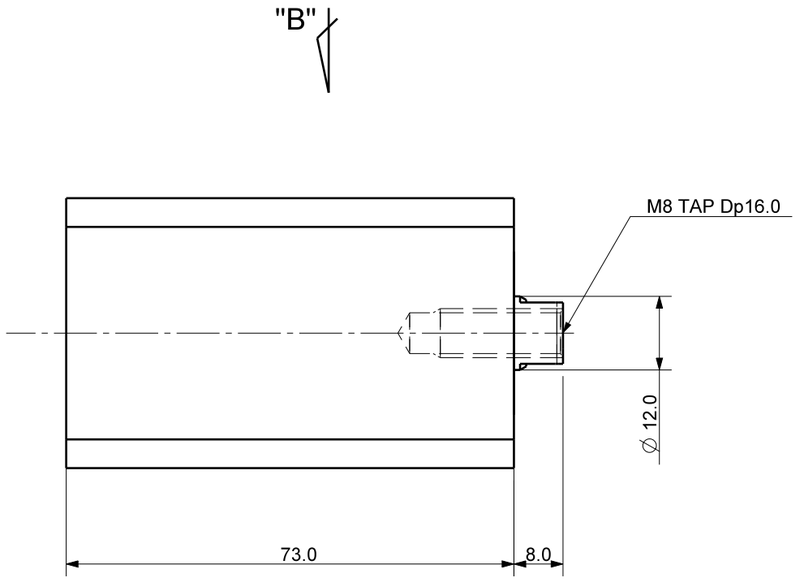


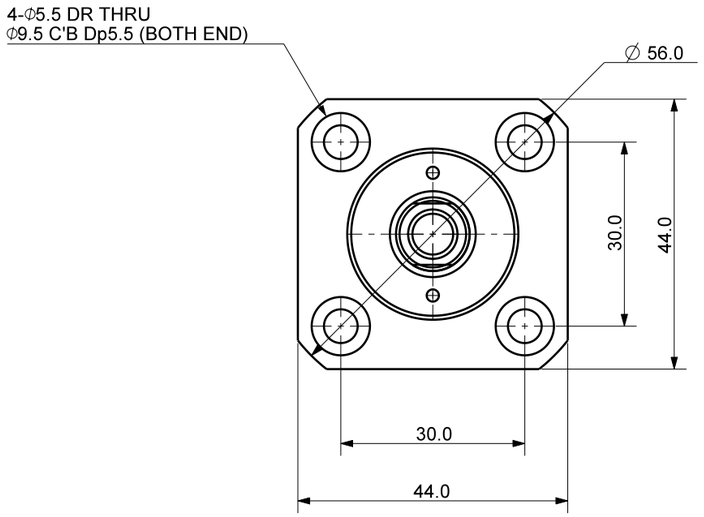


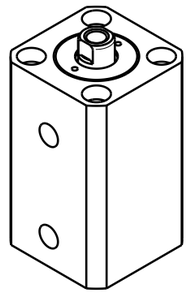

Isometric view (1:2)

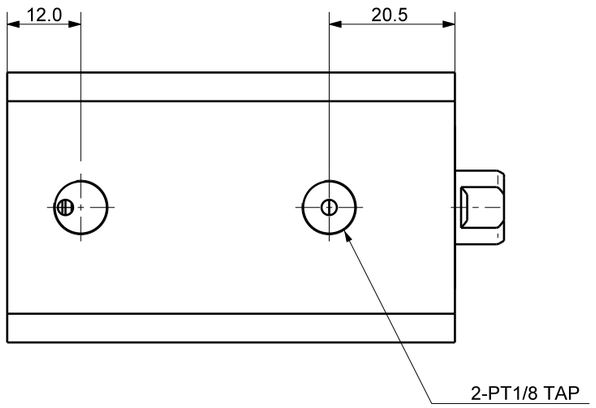


View B (1:1)

| DET.NO | NAME | Q'TY | MAT'L | FINAL SIZES & PART No | REMARK |
|---|---|---|---|---|---|

| | | |
|---|---|---|
| UNLESS OTHERWISE SPECIFIED | SIGNATURES | MO-DA-YR |
| DIMENSIONS ARE IN MM | DRAWN JHB | 09-19-16 |
| ALL SURFACES 6.3S | CHECKED | |
| TOLERANCES | APPROVED | |
| ANGLE ± | | |
| X. ± | | |
| .X ± 0.15 | | |
| .XX ± | | |
| FINISH BLOCK OXIDE | WORK ORDER NO | |
| HEAT TREAT HRC18~22 | | |

케이제이에프(주)
TOTAL CLAMPING SYSTEMS

TITLE

# BLOCK CLAMP

| REF DWG NO. | DWG NO | |
|---|---|---|
| --- | BDV-2030_- | A3 |
| SCALE / | TOOL ☐ PART ☐ | SHEET OF |