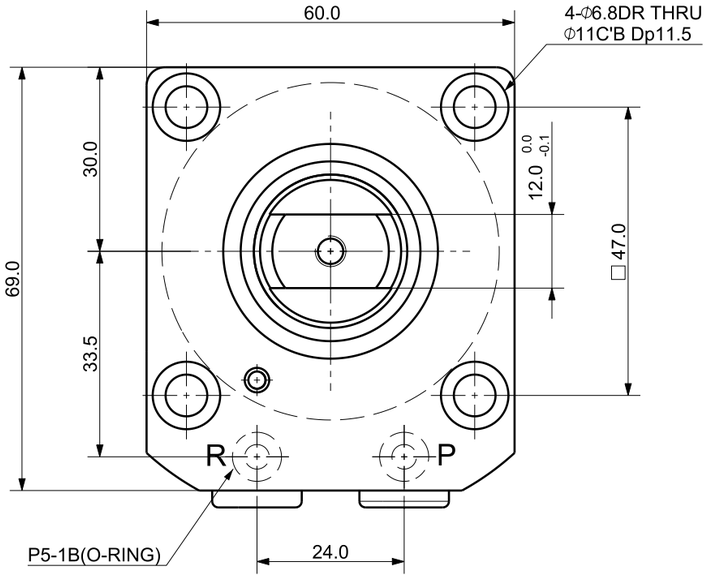

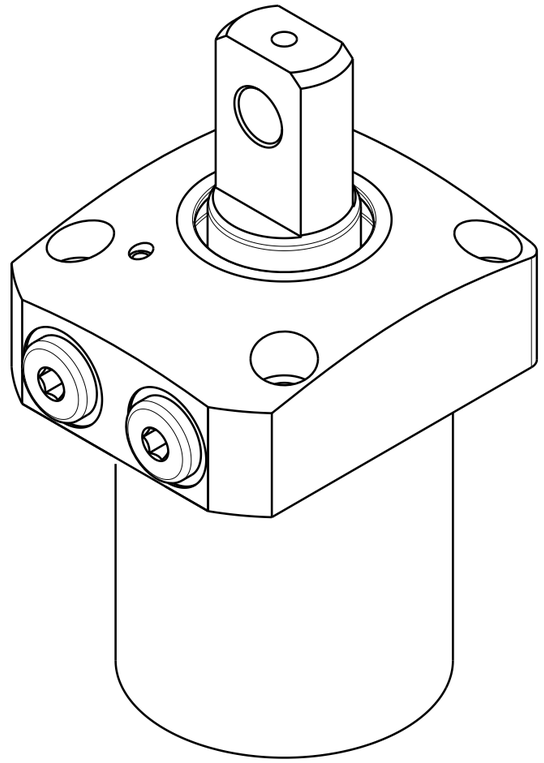

Isometric view (1:1)

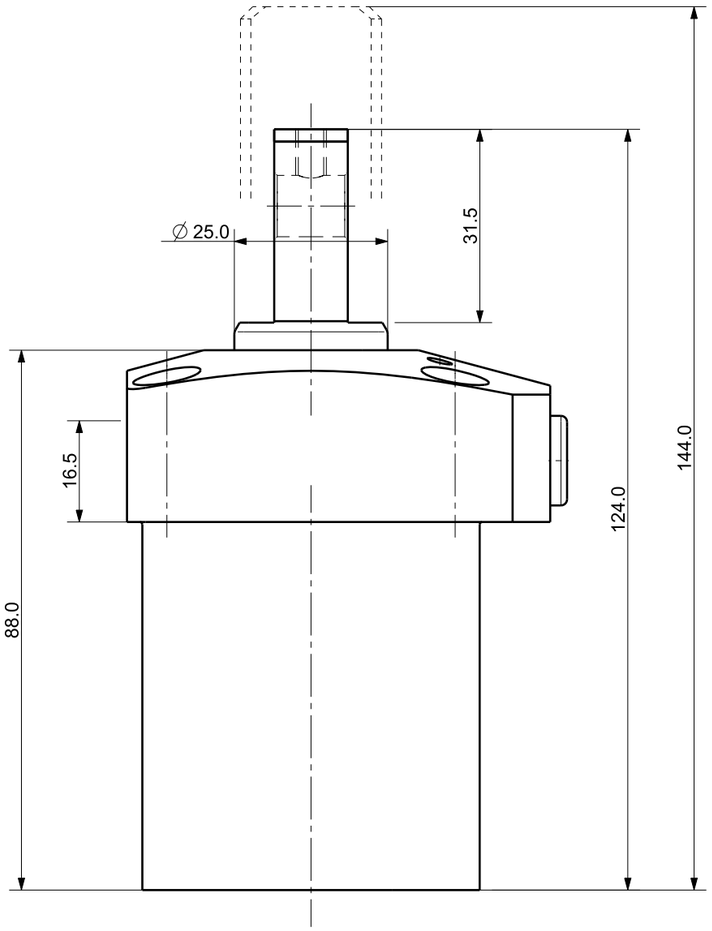

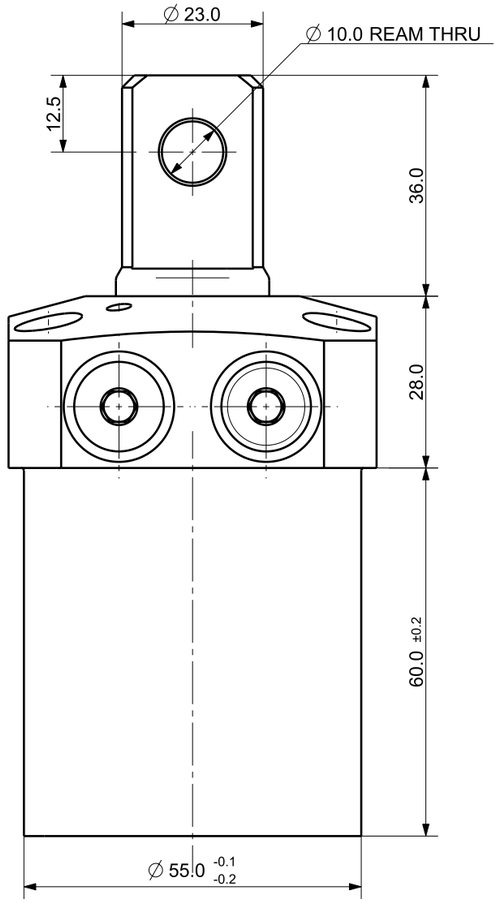

NOTE

1. MODEL No : CSDR-4220GP
1. PISTON DIA : Φ42.0
2. ROD DIA : Φ25.0
3. STROKE = 20.0mm(Straight : 10.0 mm+Swing : 10.0 mm)
4. OPERATING PRESSURE : 20~70 Kg/Cm^2)
5. OPERATING TEMPERATURE : 0 ~ 60 ℃

UNLESS OTHERWISE SPECIFIED	SIGNATURES	MO-DA-YR	(주)케이제이에프 TOTAL CLAMPING SYSTEMS
DIMENSIONS ARE IN MM	DRAWN		
ALL SURFACES 6.3S	CHECKED		TITLE
TOLERANCES	APPROVED		SWING CLAMP
ANGLE ±			
X. ±			
.X ± 0.15			
.XX ±			
FINISH BLOCK OXIDE	WORK ORDER NO		REF DWG NO. --- / DWG NO CSDR-4220GP / A3
HEAT TREAT HRC18~22			SCALE / TOOL □ PART □ SHEET OF