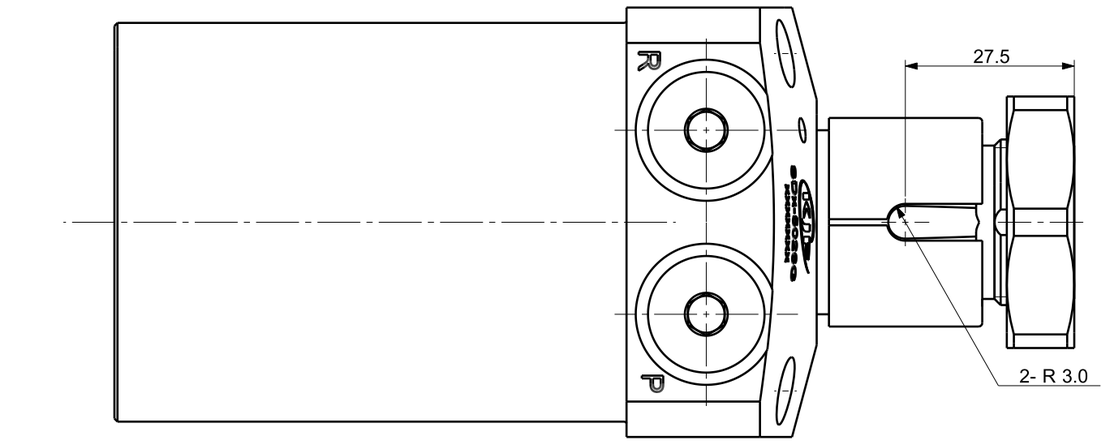

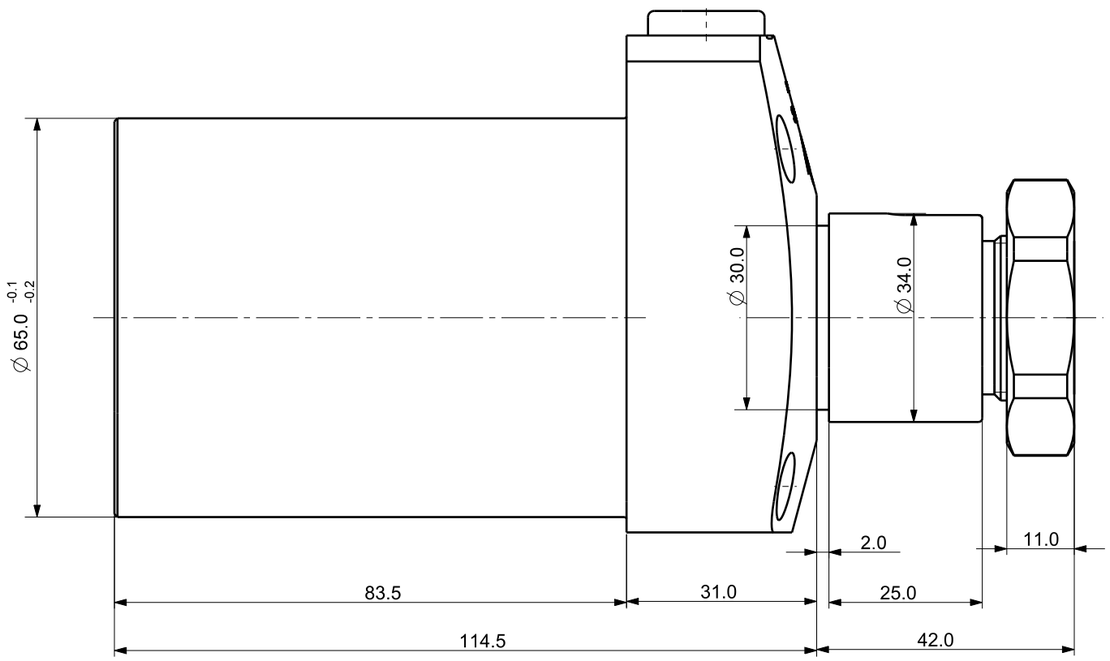

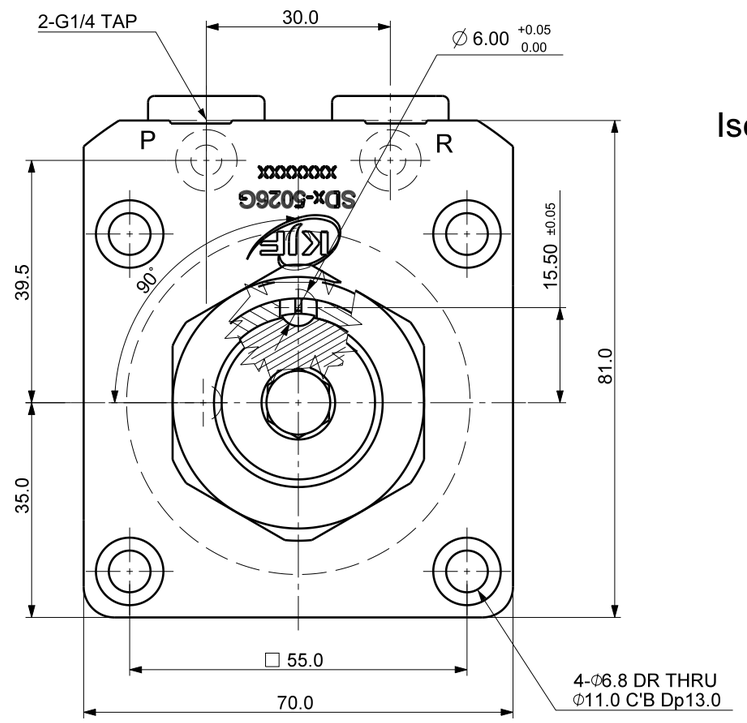

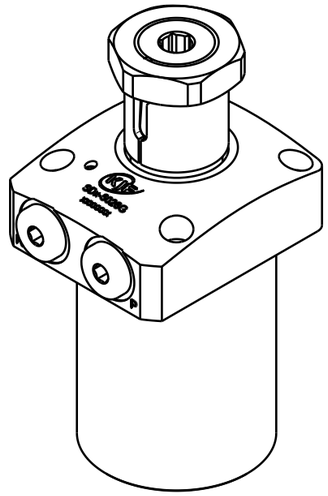

Isometric view (1:2)

NOTE

1. MODEL No : CSDR-5026G
1. PISTON DIA : Φ50.0
2. ROD DIA : Φ30.0
3. STROKE = 26.0mm(Straight : 10.0 mm+Swing : 16.0 mm)
4. OPERATING PRESSURE : 20~70 Kg/Cm^2)
5. OPERATING TEMPERATURE : 0 ~ 60 ℃

UNLESS OTHERWISE SPECIFIED	SIGNATURES	MO-DA-YR	(주)케이제이에프 TOTAL CLAMPING SYSTEMS
DIMENSIONS ARE IN MM	DRAWN		
ALL SURFACES	CHECKED		TITLE
TOLERANCES ANGLE ± X. ± .X ± .XX ±	APPROVED		SWING CLAMP
FINISH	WORK ORDER NO		REF DWG NO. / DWG NO CSDR-5026G / A3
HEAT TREAT			SCALE / TOOL □ PART □ SHEET OF