FILE NAME:

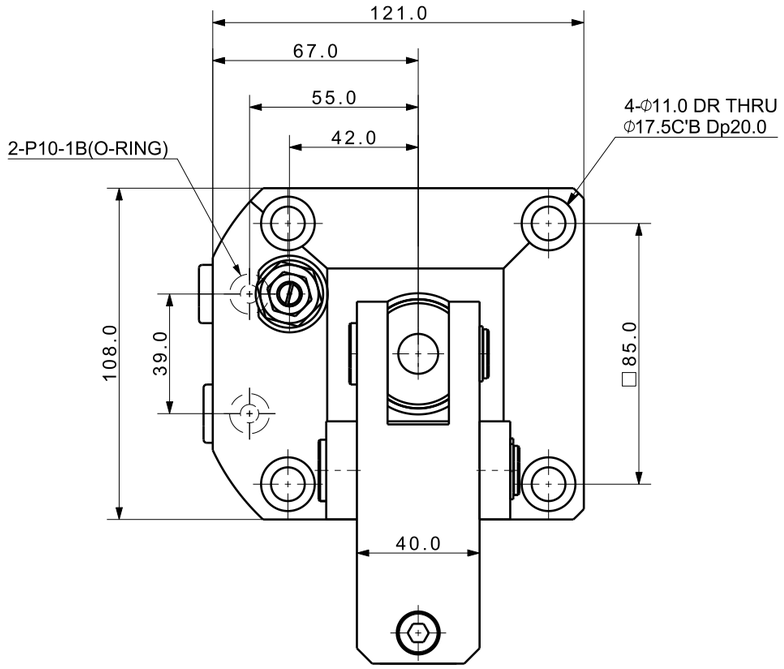

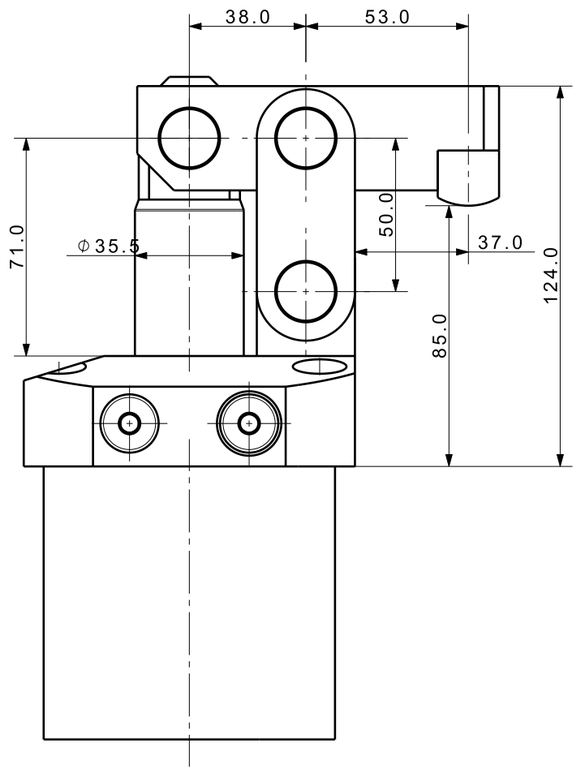

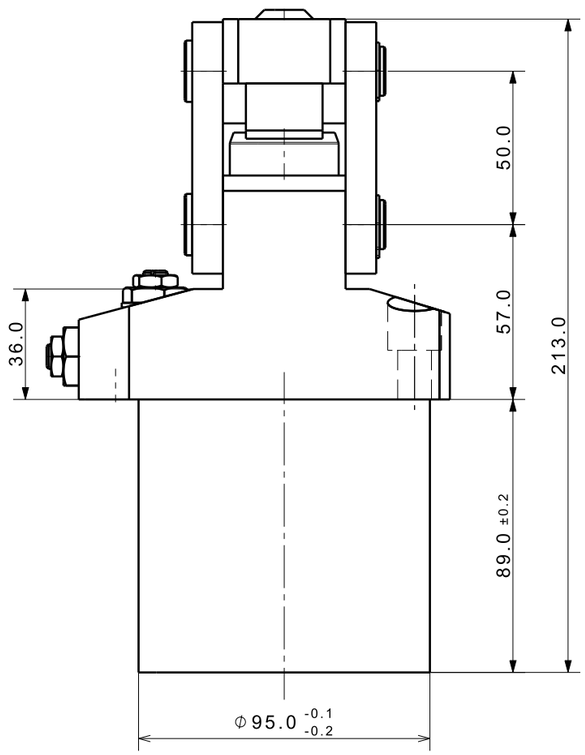

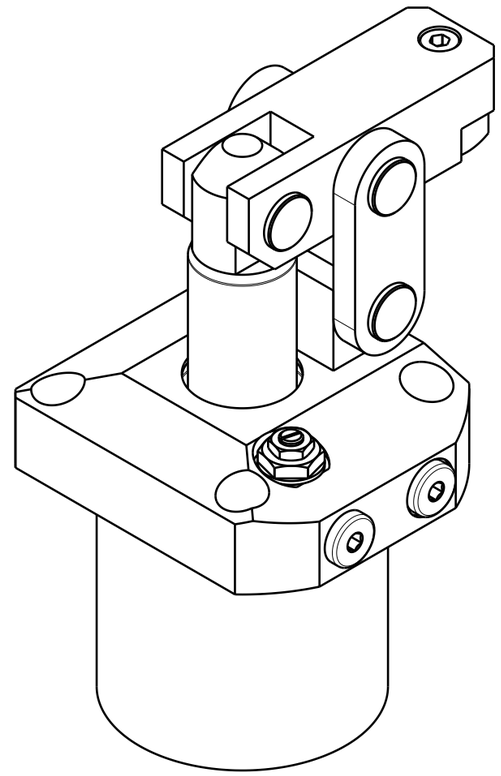

Isometric view (1:2)

UNLESS OTHERWISE SPECIFIED	SIGNATURES	MO-DA-YR	(주)케이제이에프 TOTAL CLAMPING SYSTEMS
DIMENSIONS ARE IN MM	DRAWN		
ALL SURFACES	CHECKED		TITLE
TOLERANCES ANGLE ± X. ± .X ± .XX ±	APPROVED		HINGE CLAMP
FINISH	WORK ORDER NO		REF DWG NO. --- / DWG NO HGC-6315GVT-RH / A3
HEAT TREAT			SCALE / TOOL ☐ PART ☐ SHEET OF