FILE NAME:

REVISIONS				
ZONE	LTR	DESCRIPTION	DATE	APPROVED

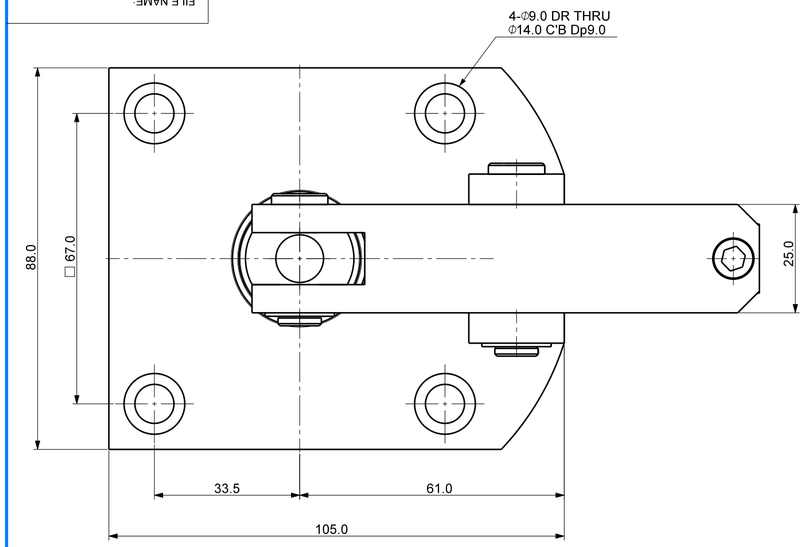

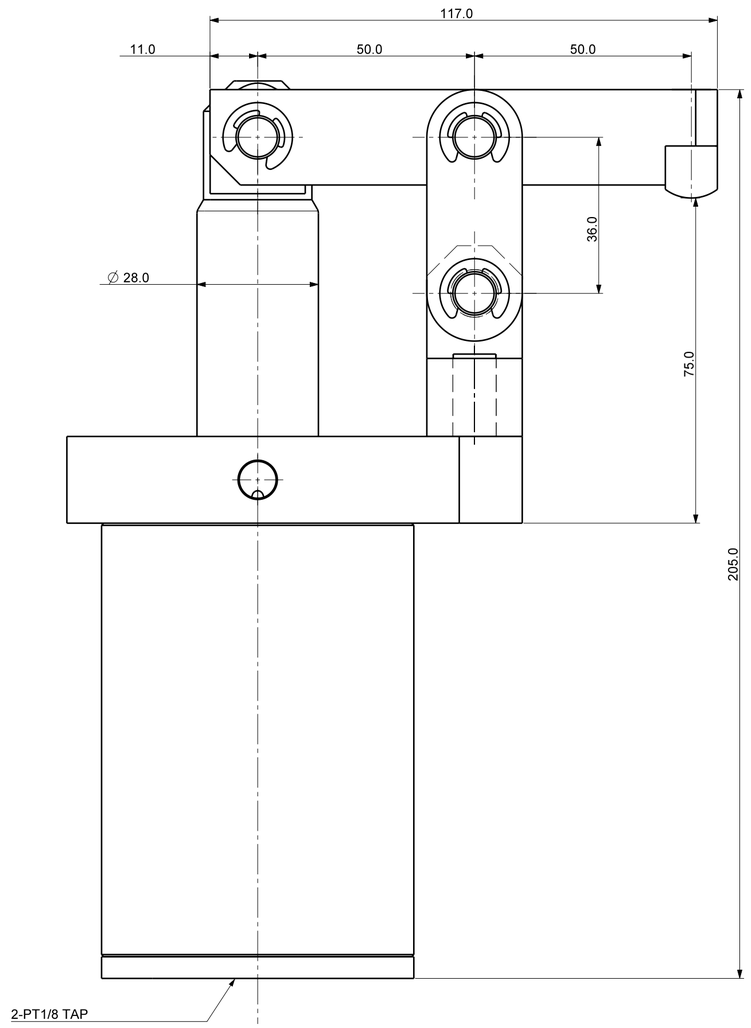

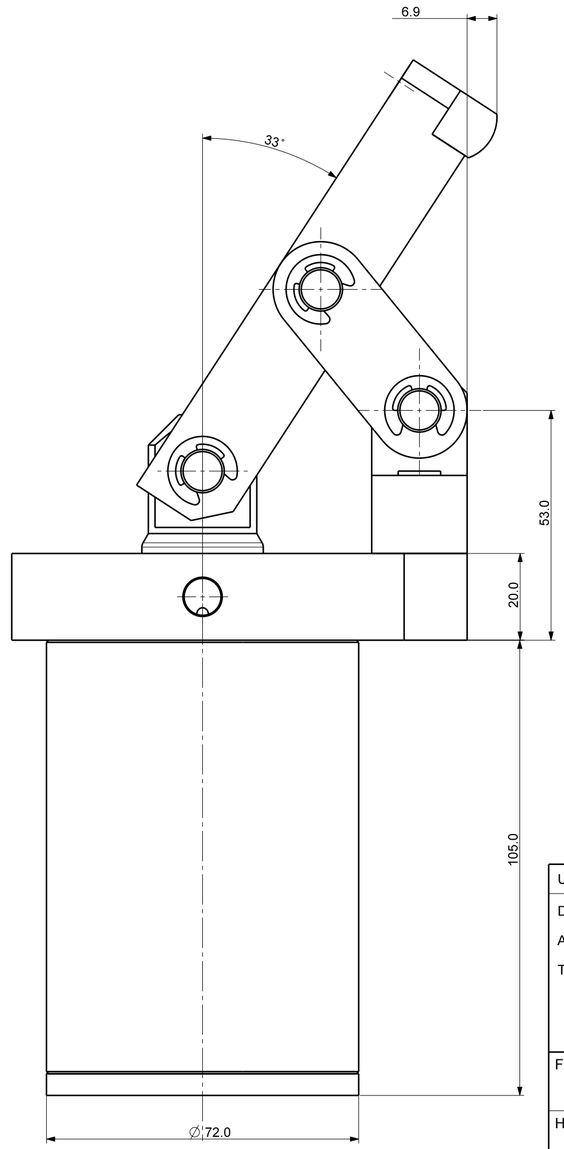

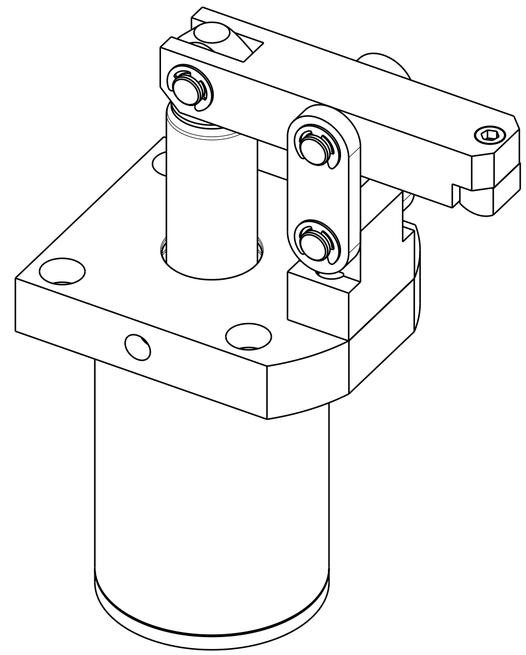

Isometric view (3:4)

DET.NO	NAME	Q'TY	MAT'L	FINAL SIZES & PART No	REMARK

UNLESS OTHERWISE SPECIFIED	SIGNATURES	MO-DA-YR
DIMENSIONS ARE IN MM	DRAWN	
ALL SURFACES 6.3s	CHECKED	
TOLERANCES	APPROVED	
ANGLE ±		
X. ±		
.X ± 0.15		
.XX ±		
FINISH	WORK ORDER NO	
HEAT TREAT		

(주)케이제이에프
TOTAL CLAMPING SYSTEMS

TITLE

AIR HINGE CALMP

REF DWG NO.	DWG NO	
-	HGC-6353A	A2
SCALE	TOOL ☐ PART ☐	SHEET OF