FILE NAME:

REVISIONS				
ZONE	LTR	DESCRIPTION	DATE	APPROVED

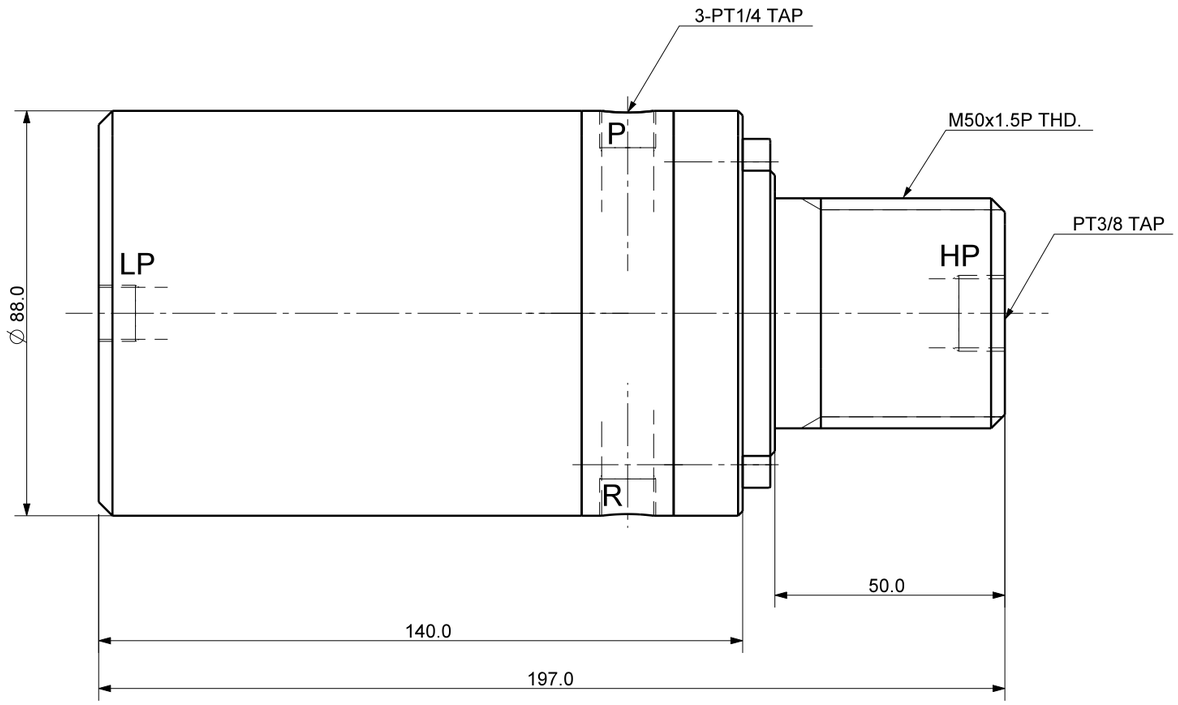

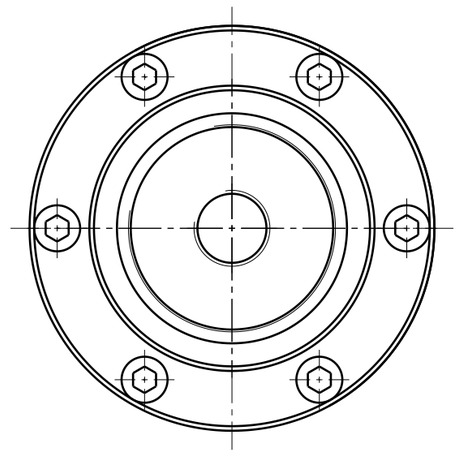

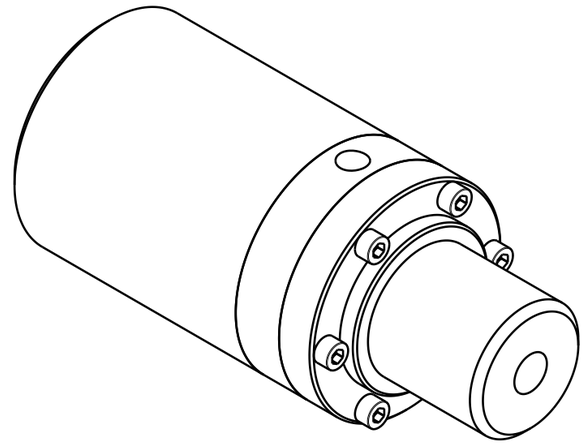

Isometric view (1:2)

주 기)
1. 승압비 : 6.3 : 1
2. 최대토출유량 : 23 cc

DET.NO	NAME	Q'TY	MAT'L	FINAL SIZES & PART No	REMARK

UNLESS OTHERWISE SPECIFIED	SIGNATURES	MO-DA-YR
DIMENSIONS ARE IN MM	DRAWN OYS	00-00-00
ALL SURFACES 6.3S	CHECKED	
TOLERANCES	APPROVED	
ANGLE ±		
X. ±		
.X ± 0.15		
.XX ±		
FINISH BLOCK OXIDE	WORK ORDER NO	
HEAT TREAT HRC18~22		

케이제이에프(주)
TOTAL CLAMPING SYSTEMS

TITLE

HYD. INTENSIFIER

REF DWG NO.	DWG NO	
---	HHB-0602_-	A3
SCALE /	TOOL ☐ PART ☐	SHEET OF