FILE NAME:

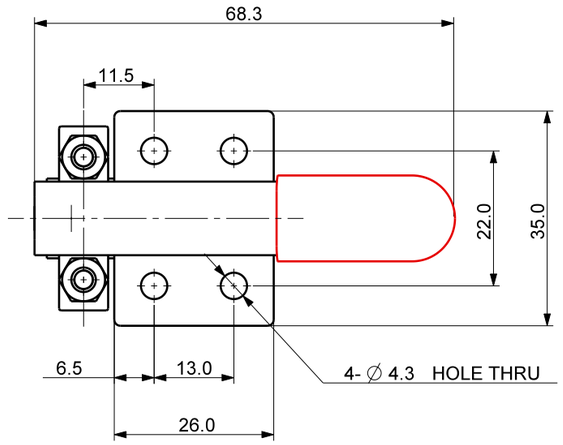

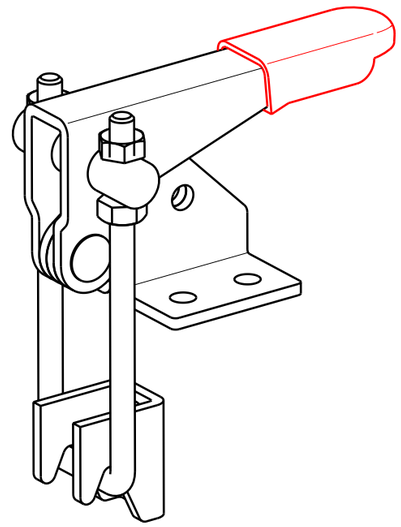

Isometric view (1:1)

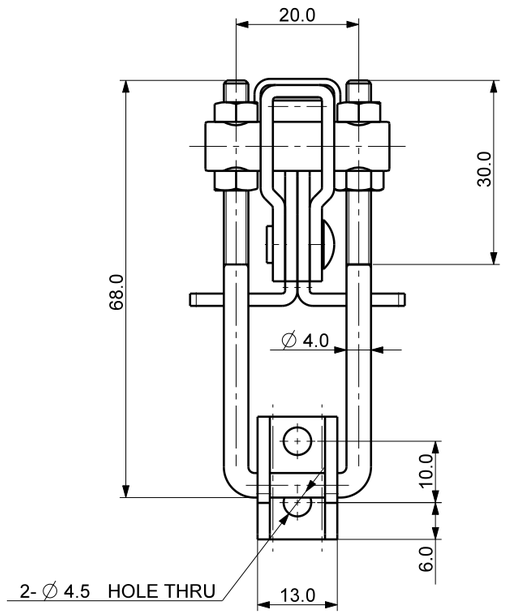

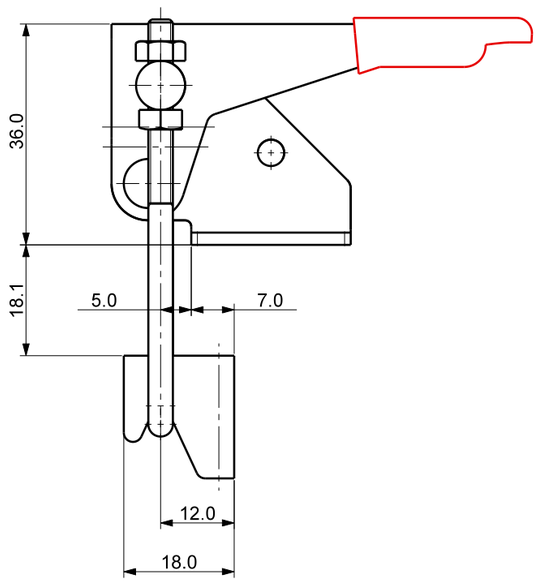

UNLESS OTHERWISE SPECIFIED	SIGNATURES	MO-DA-YR	(주)케이제이에프 TOTAL CLAMPING SYSTEMS
DIMENSIONS ARE IN MM	DRAWN		TITLE
ALL SURFACES	CHECKED		TOGGLE CLAMP (LATCH TYPE)
TOLERANCES ANGLE ± X. ± .X ± .XX ±	APPROVED		
FINISH ---	WORK ORDER NO		REF DWG NO. --- / DWG NO KJF- 016-43F / A3
HEAT TREAT ---			SCALE / TOOL ☐ PART ☐ SHEET OF