FILE NAME:

REVISIONS				
ZONE	LTR	DESCRIPTION	DATE	APPROVED

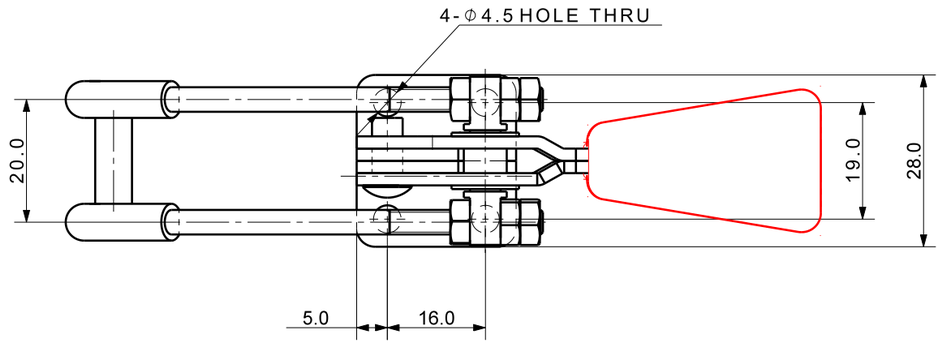

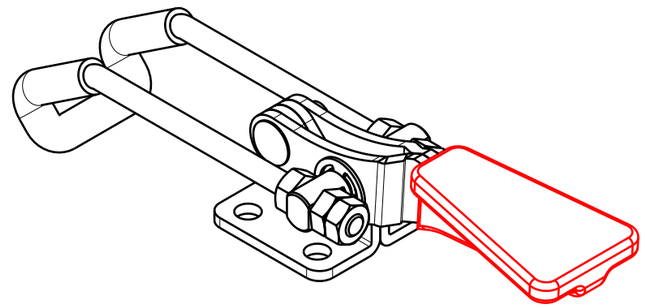

Isometric view (1:1)

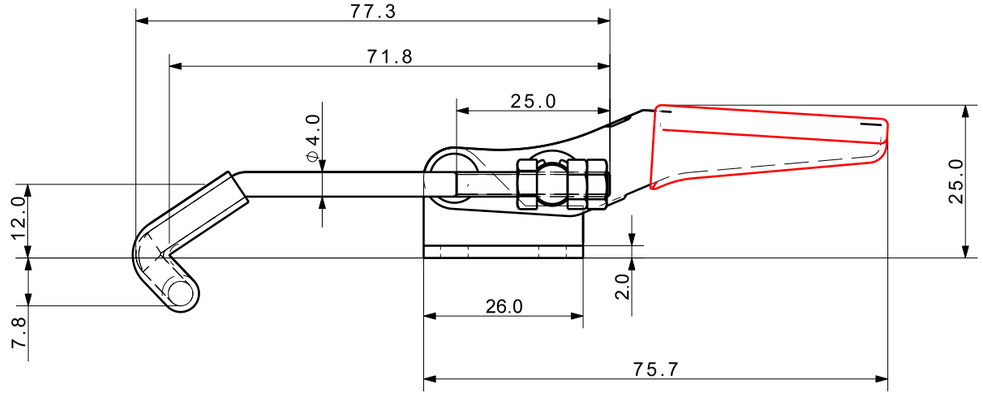

주 기)
1. Adjust Stroke : 16.0mm
2. Weight : 약 70 g
3. Holding Capacity : 160 Kg(Max)

DET.NO	NAME	Q'TY	MAT'L	FINAL SIZES & PART No	REMARK

UNLESS OTHERWISE SPECIFIED	SIGNATURES	MO-DA-YR
DIMENSIONS ARE IN MM	DRAWN ---	---
ALL SURFACES 6.3S	CHECKED	
TOLERANCES	APPROVED	
ANGLE ±		
X. ±		
.X ± 0.15		
.XX ±		
FINISH	WORK ORDER NO	
HEAT TREAT		

(주)케이제이에프
TOTAL CLAMPING SYSTEMS

TITLE
LATCH TYPE TOGGLE CLAMP

REF DWG NO.	DWG NO	
---	KJF- 016-45F_-	A3
SCALE /	TOOL ☐ PART ☐	SHEET OF