FILE NAME:

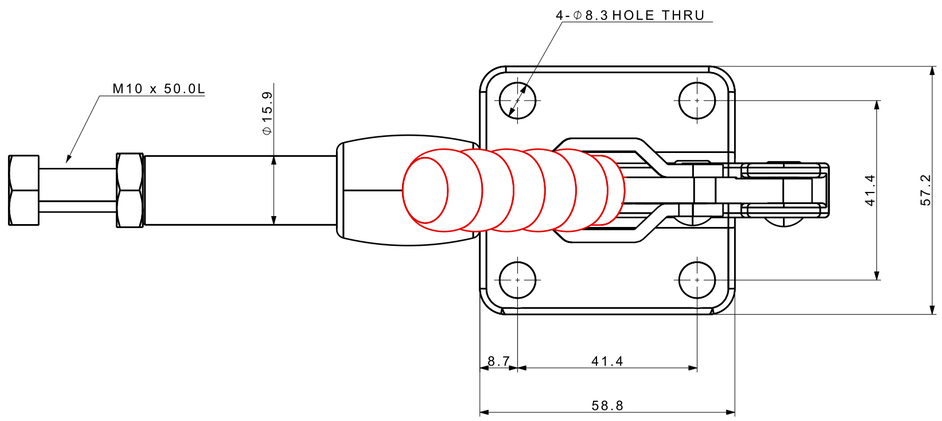

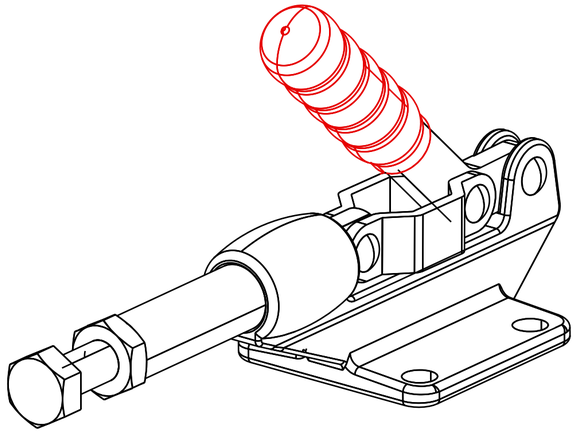

Isometric view (1:1)

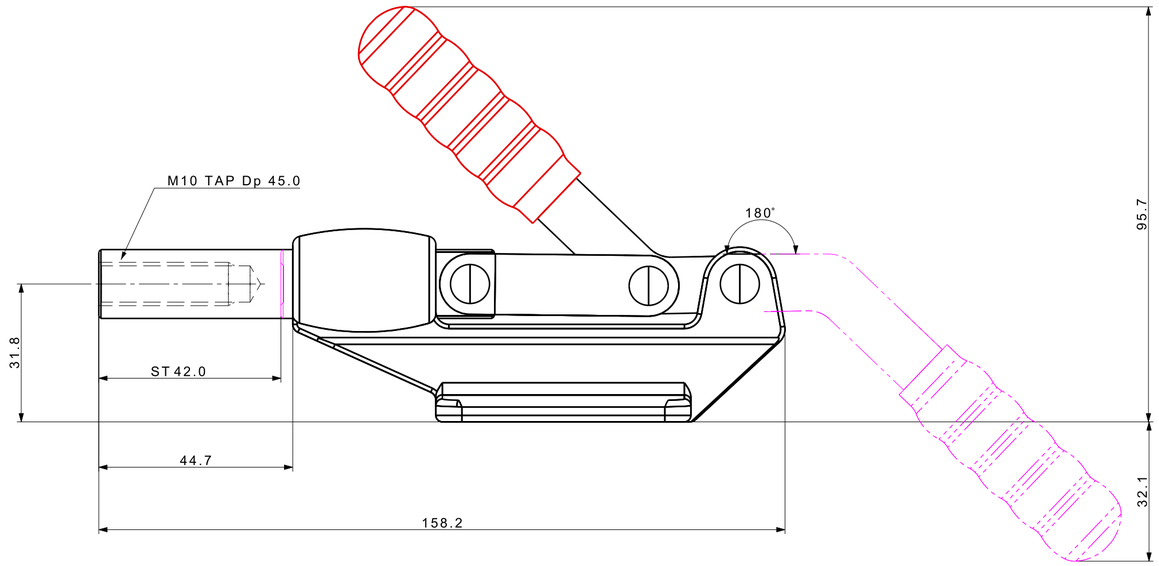

UNLESS OTHERWISE SPECIFIED	SIGNATURES	MO-DA-YR	(주)케이제이에프 TOTAL CLAMPING SYSTEMS
DIMENSIONS ARE IN MM	DRAWN ---		
ALL SURFACES	CHECKED		TITLE
TOLERANCES ANGLE ± X. ± .X ± .XX ±	APPROVED		TOGGLE CLAMP PUSH/PULL Type
FINISH	WORK ORDER NO	REF DWG NO. -	DWG NO KJF- 040-31FSR A2
HEAT TREAT		SCALE	TOOL ☐ PART ☐ SHEET OF