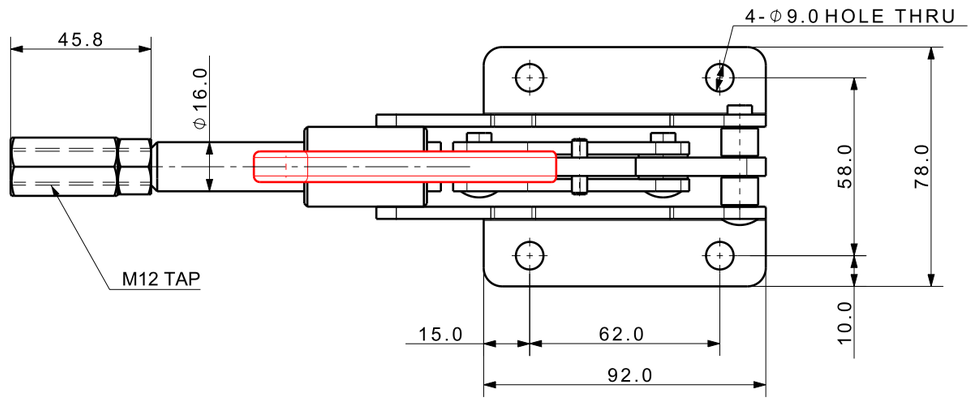

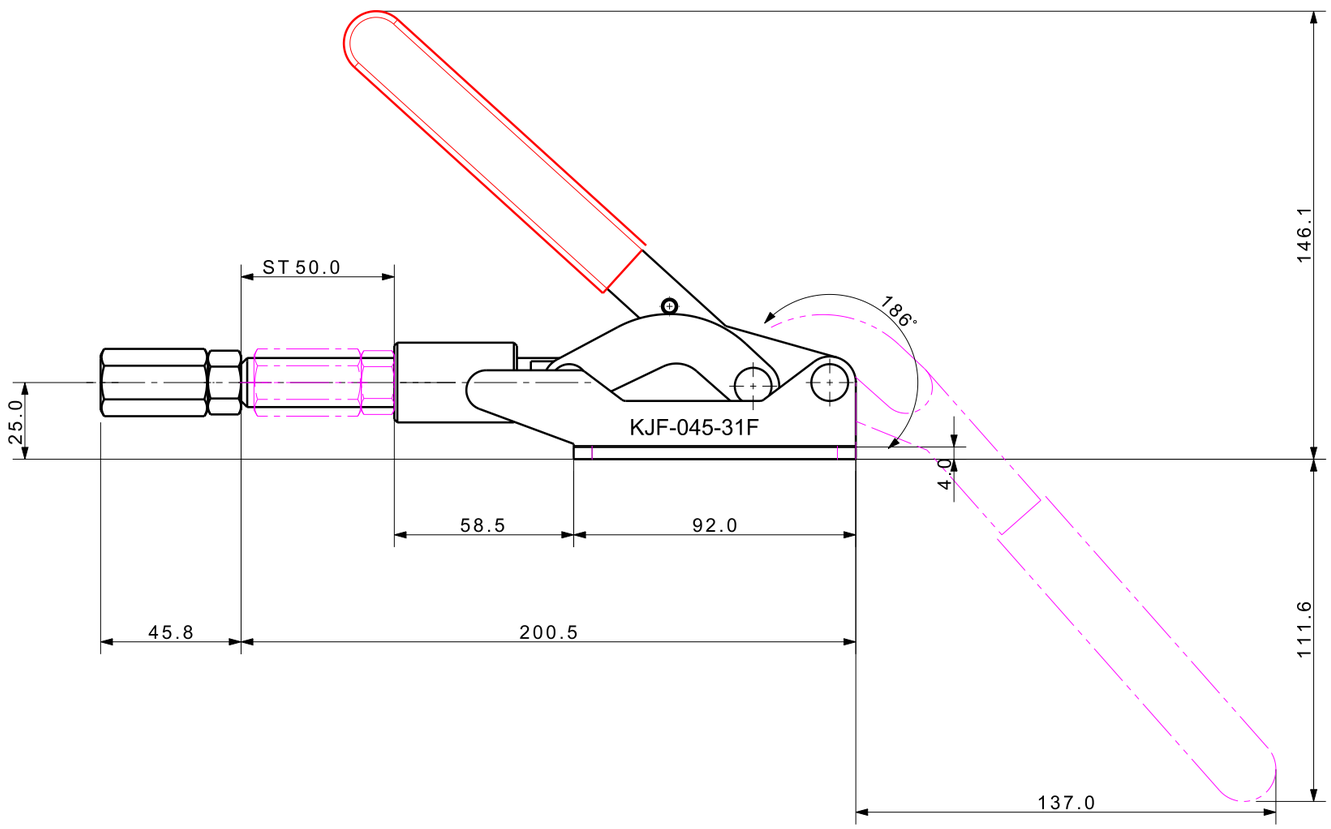

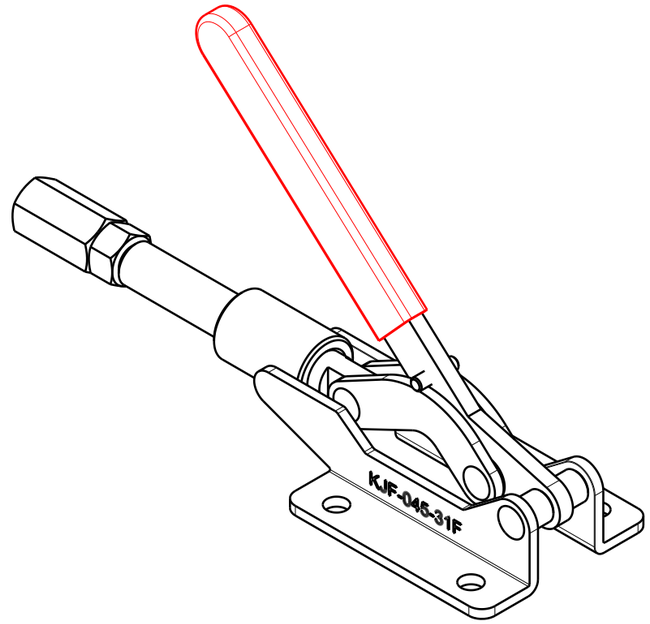

Isometric view (1:2)

UNLESS OTHERWISE SPECIFIED	SIGNATURES	MO-DA-YR	(주)케이제이에프 TOTAL CLAMPING SYSTEMS
DIMENSIONS ARE IN MM	DRAWN		
ALL SURFACES	CHECKED		TITLE
TOLERANCES ANGLE ± X. ± .X ± .XX ±	APPROVED		TOGGLE CLAMP (PUSH/PULL TYPE)
FINISH --	WORK ORDER NO		REF DWG NO. --- / DWG NO KJF-045-31F / A3
HEAT TREAT --			SCALE / / TOOL ☐ PART ☐ / SHEET OF