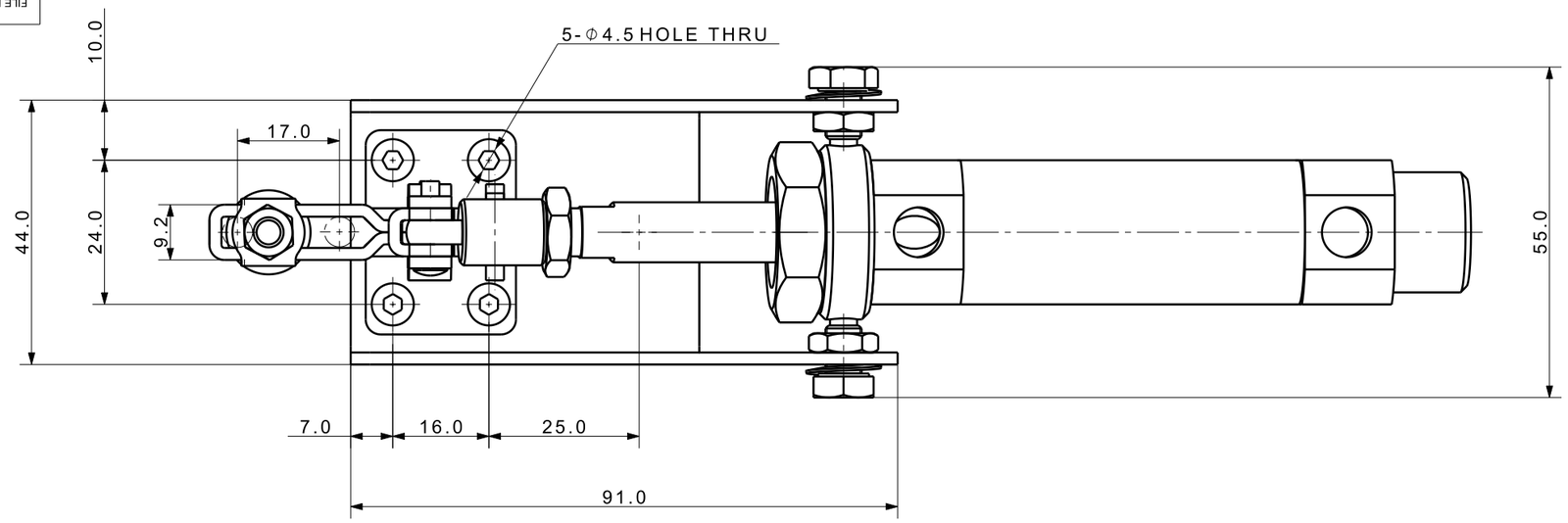

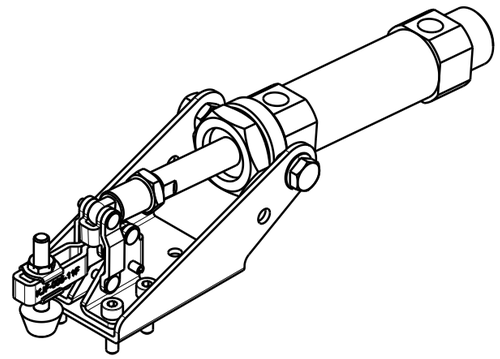

Isometric view (1:2)

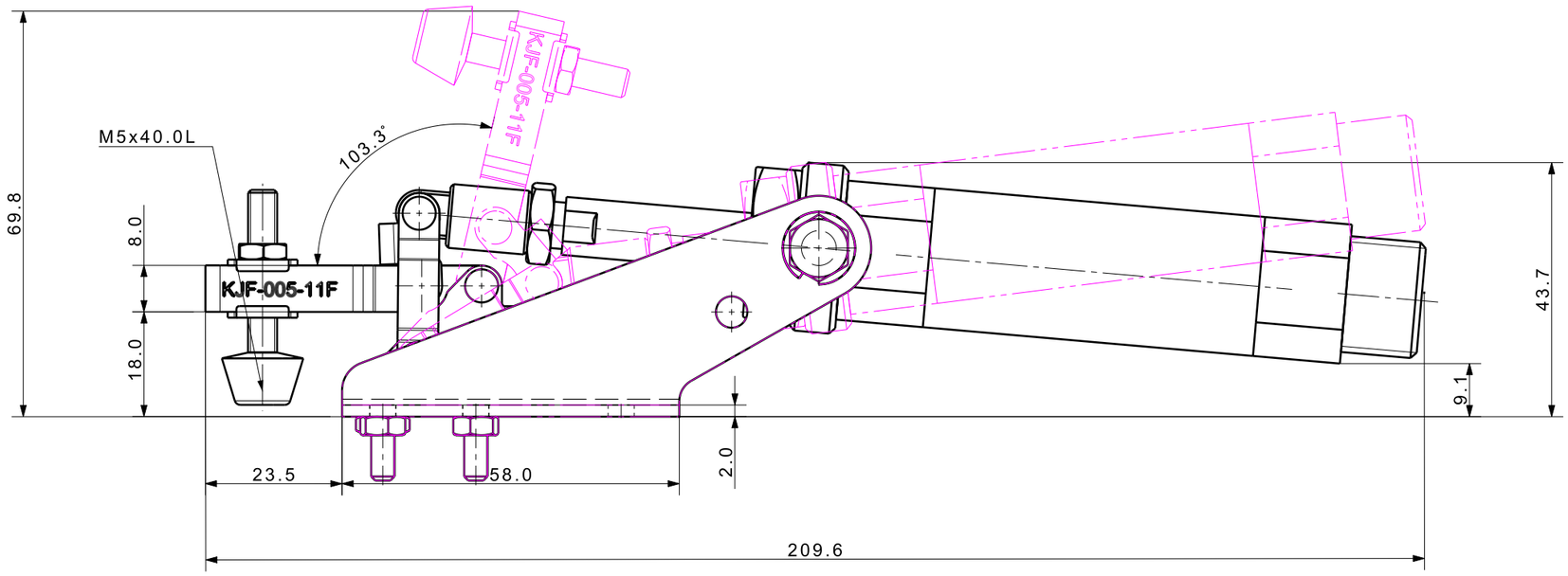

Holding Capacity(Kg)	50	Spindle Adjust(mm)	17
Weight(g)	345	Air Port Size	PT1/8
Arm Move	103°	Cylinder Size	Φ20X25(ST)

UNLESS OTHERWISE SPECIFIED	SIGNATURES	MO-DA-YR
DIMENSIONS ARE IN MM	DRAWN	
ALL SURFACES	CHECKED	
TOLERANCES	APPROVED	
ANGLE ±		
X. ±		
.X ±		
.XX ±		
FINISH ----	WORK ORDER NO	
HEAT TREAT ---		

(주)케이제이에프
TOTAL CLAMPING SYSTEMS

TITLE

TOGGLE CLAMP
(Air Type)

REF DWG NO. ---	DWG NO KJF- AR-1051	A3
SCALE	TOOL ☐ PART ☐	SHEET OF