FILE NAME:

REVISIONS				
ZONE	LTR	DESCRIPTION	DATE	APPROVED

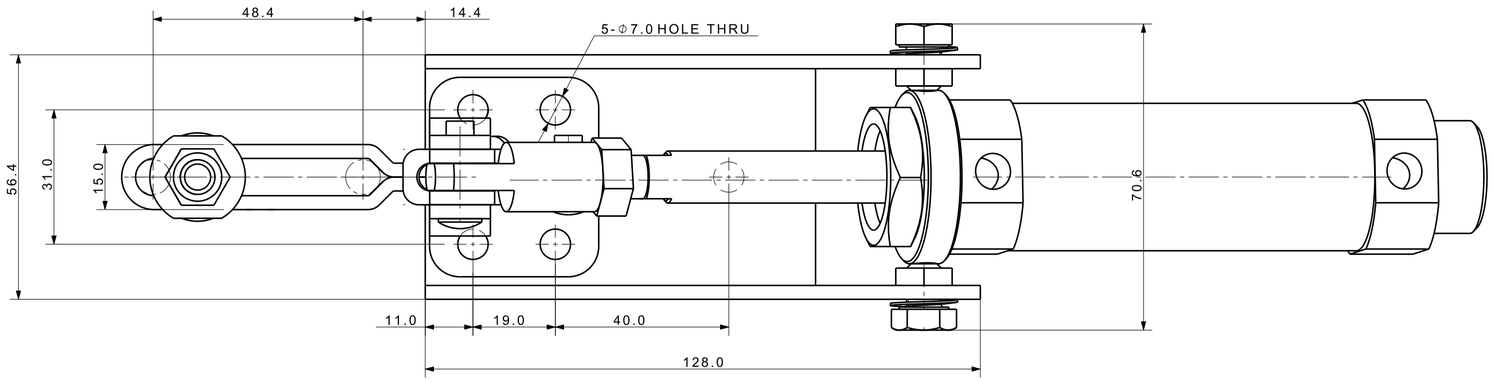

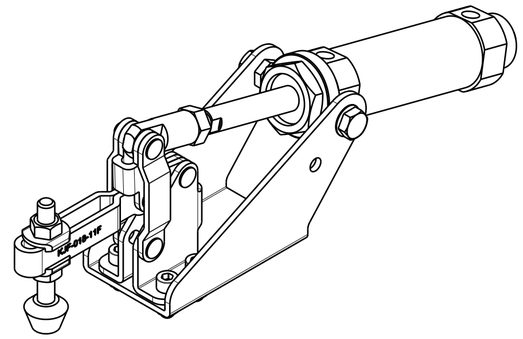

Isometric view (1:2)

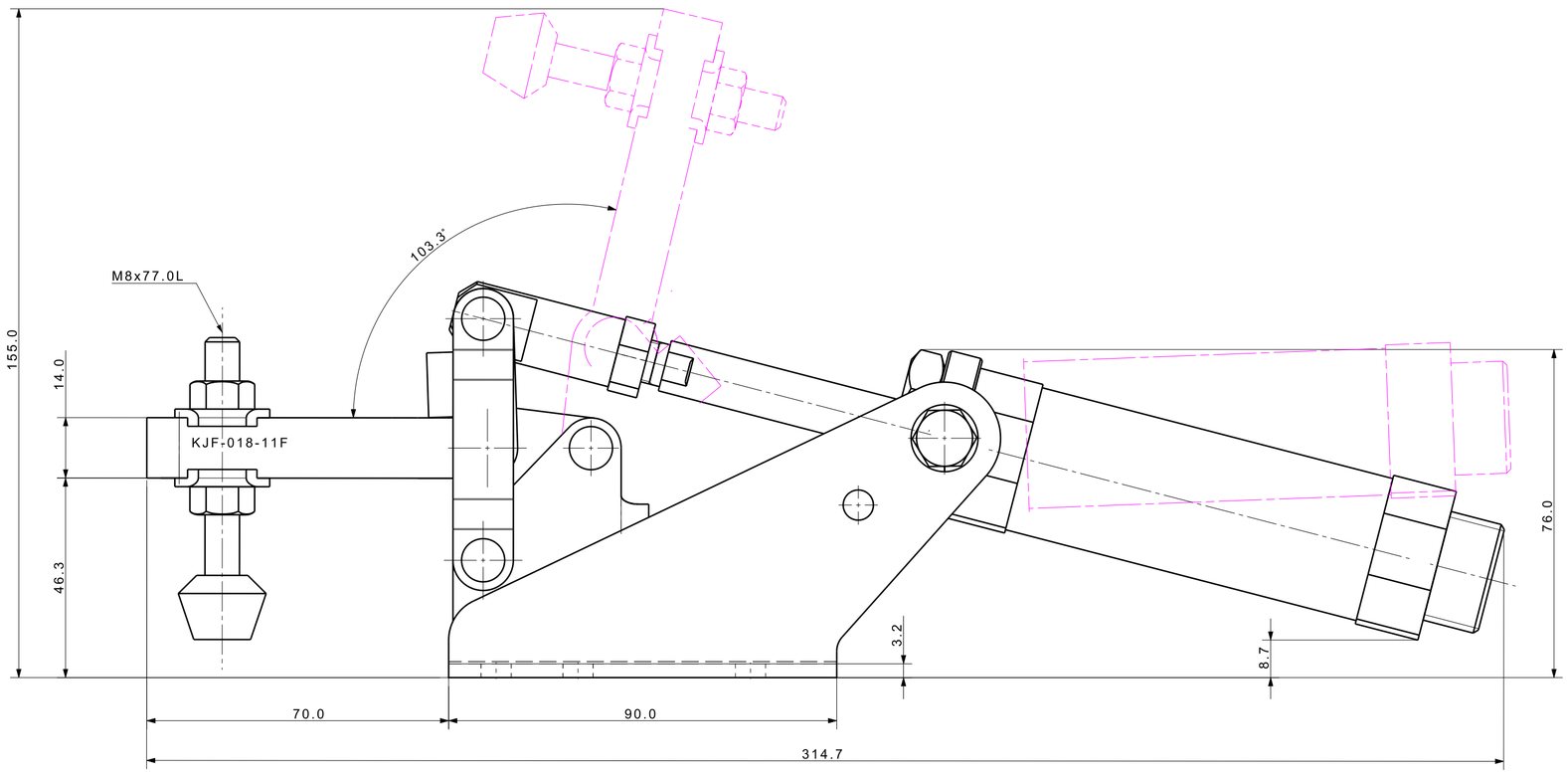

Holding Capacity(Kg)	180	Spindle Adjust(mm)	48
Weight(g)	1140	Air Port Size	PT1/8
Arm Move	103°	Cylinder Size	Φ32X50(ST)

DET.NO	NAME	Q'TY	MAT'L	FINAL SIZES & PART No	REMARK

UNLESS OTHERWISE SPECIFIED
DIMENSIONS ARE IN MM
ALL SURFACES 6.3s
TOLERANCES
ANGLE ±
X. ±
.X ± 0.15
.XX ±

SIGNATURES		MO-DA-YR
DRAWN	---	00-00-00
CHECKED		
APPROVED		

(주)케이제이에프
TOTAL CLAMPING SYSTEMS

TITLE
TOGGLE CLAMP (AIR TYPE)

FINISH: BLACK OXIDE
HEAT TREAT: HRC18~22
WORK ORDER NO

REF DWG NO.: -
DWG NO: KJF-AR-1181
A2
SCALE
TOOL ☐ PART ☐
SHEET OF