FILE NAME:

REVISIONS				
ZONE	LTR	DESCRIPTION	DATE	APPROVED

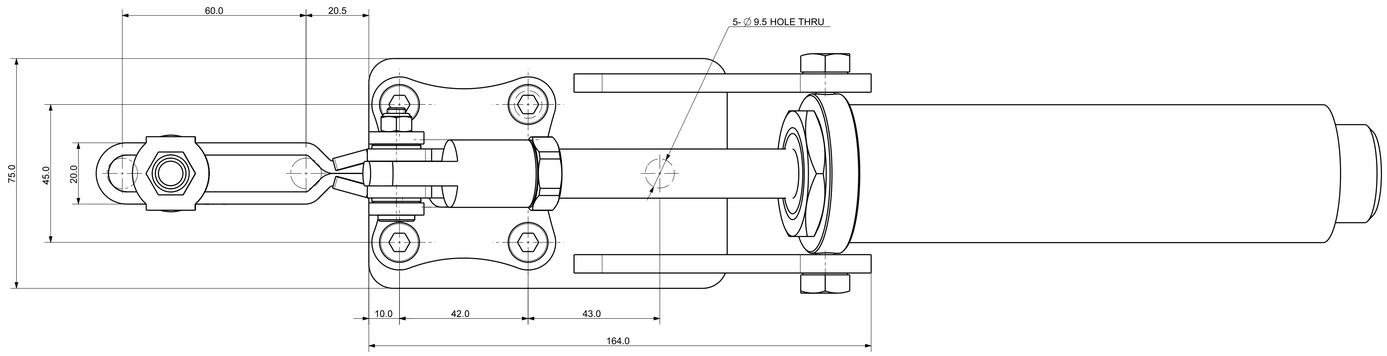

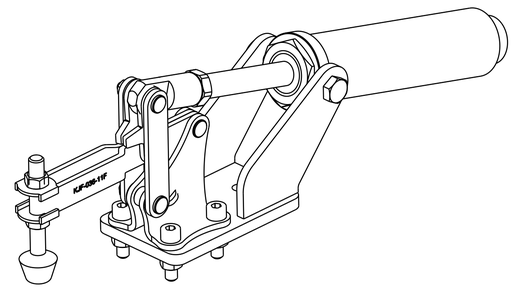

Isometric view

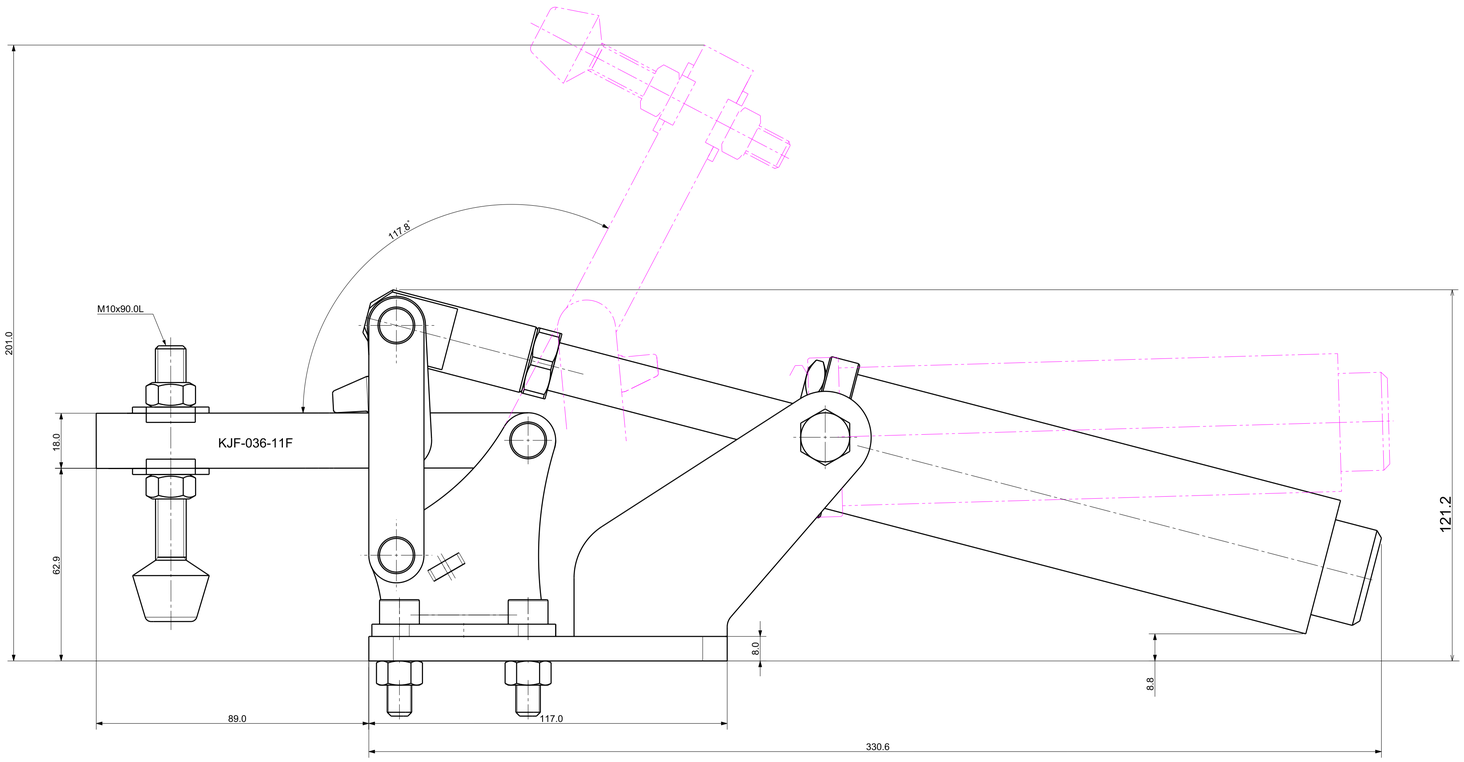

Holding Capacity(Kg)	360	Spindle Adjust(mm)	60
Weight(g)	2582	Air Port Size	PT1/4
Arm Move	118°	Cylinder Size	Φ40X75(ST)

DET.NO	NAME	Q'TY	MAT'L	FINAL SIZES & PART No	REMARK

UNLESS OTHERWISE SPECIFIED
DIMENSIONS ARE IN MM
ALL SURFACES 6.3s
TOLERANCES
ANGLE ±
X. ±
.X ± 0.15
.XX ± 0.05

FINISH

HEAT TREAT

SIGNATURES	MO-DA-YR
DRAWN ----	00-00-00
CHECKED	
APPROVED	

WORK ORDER NO

(주)케이제이에프
TOTAL CLAMPING SYSTEMS

TITLE

AIR TOGGLE CLAMP

REF DWG NO. -

DWG NO KJF-AR-1361

A1

SCALE

TOOL ☐ PART ☐ SHEET OF