FILE NAME:

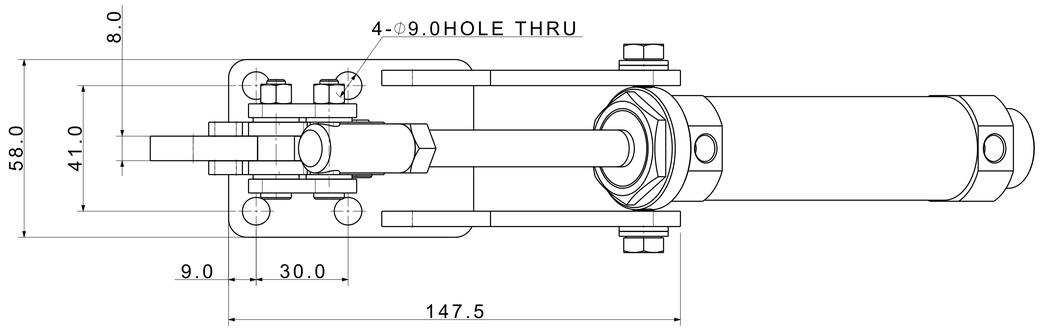

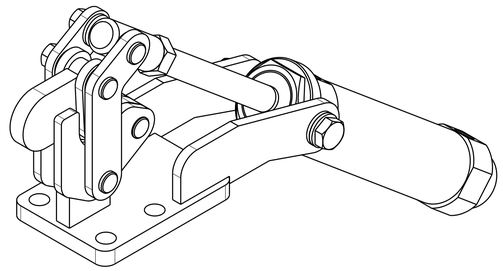

CLAMP VIEW (1:2)

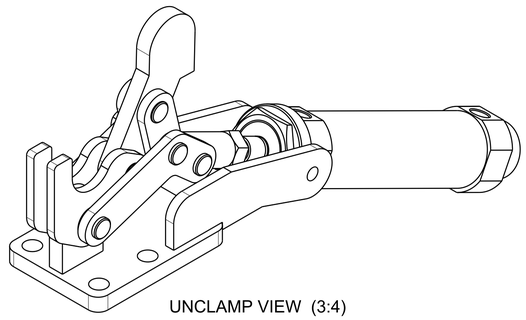

UNCLAMP VIEW (3:4)

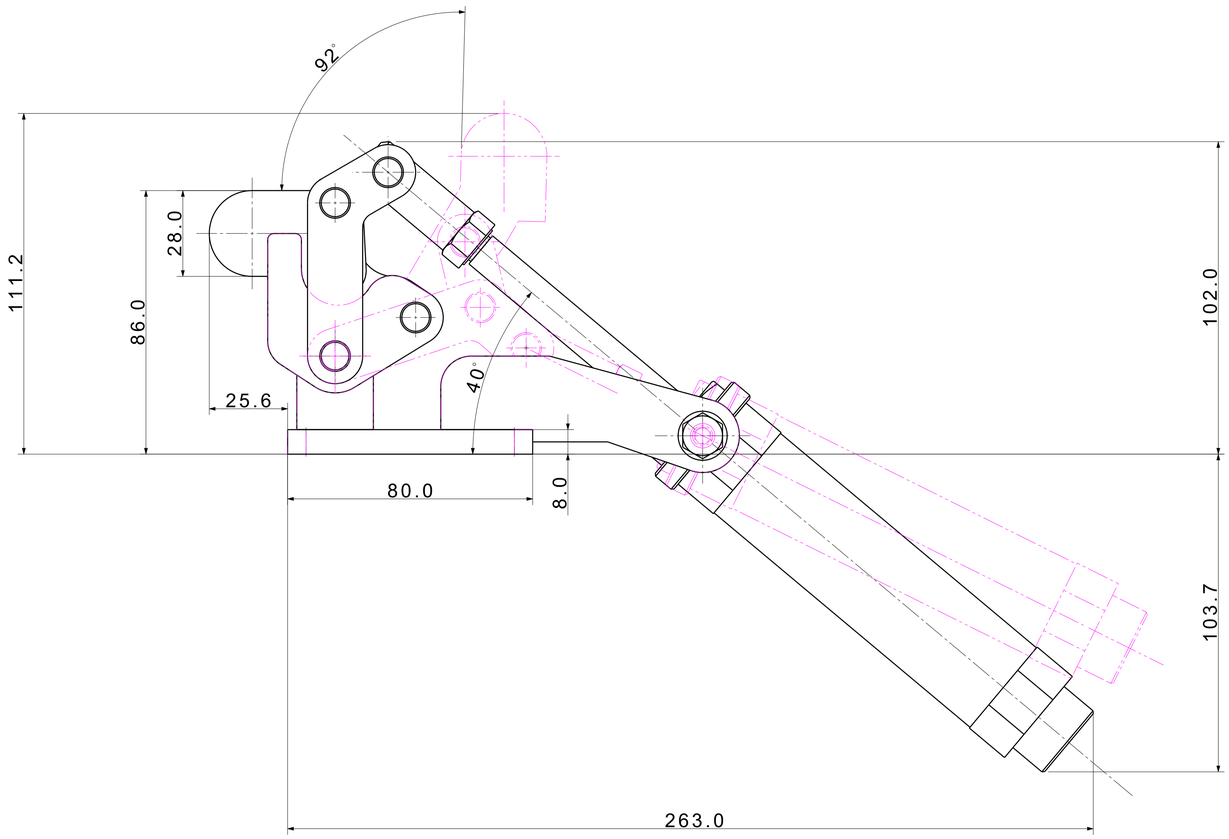

Holding Capacity(Kg)	500	Spindle Adjust(mm)	N/A
Weight(g)	1410	Air Port Size	PT1/8
Arm Move	187°	Cylinder Size	Φ32X75(ST)

UNLESS OTHERWISE SPECIFIED	SIGNATURES	MO-DA-YR
DIMENSIONS ARE IN MM	DRAWN	
ALL SURFACES 6.3s	CHECKED	
TOLERANCES	APPROVED	
ANGLE ±		
X. ±		
.X ± 0.15		
.XX ± 0.05		
FINISH	WORK ORDER NO	
HEAT TREAT		

(주)케이제이에프
TOTAL CLAMPING SYSTEMS

TITLE

AIR TOGGLE CLAMP

REF DWG NO. -	DWG NO KJF- AR-701	A1
SCALE	TOOL ☐ PART ☐	SHEET OF