FILE NAME:

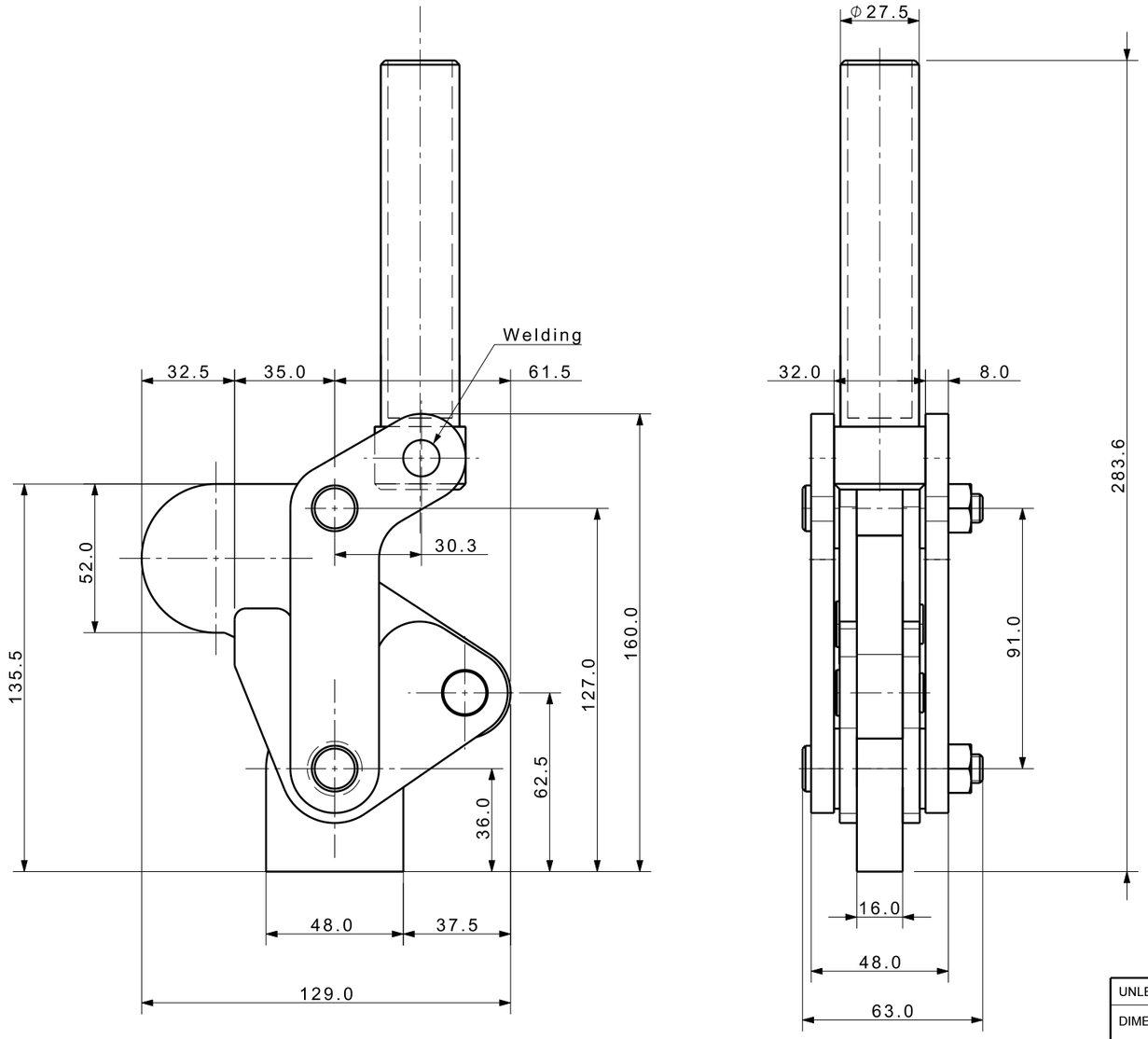


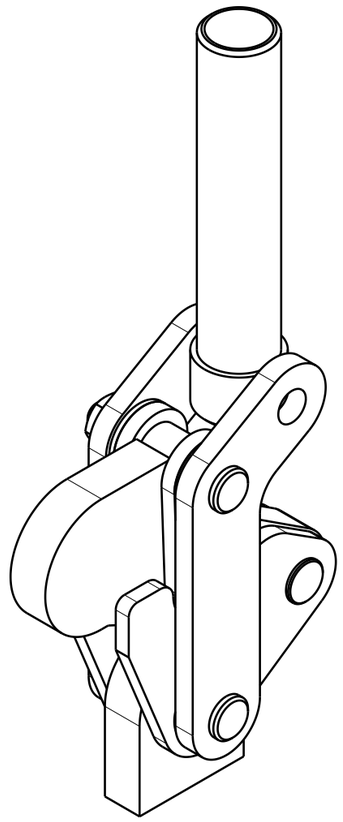

Isometric view (1:2)

| | | | |
|---|---|---|---|
| UNLESS OTHERWISE SPECIFIED | SIGNATURES | MO-DA-YR | (주)케이제이에프 TOTAL CLAMPING SYSTEMS |
| DIMENSIONS ARE IN MM | DRAWN | | TITLE |
| ALL SURFACES | CHECKED | | TOGGLE CLAMP |
| TOLERANCES ANGLE ± X. ± .X ± .XX ± | APPROVED | | Heavy Duty Weldable Type |
| FINISH --- | WORK ORDER NO | | REF DWG NO. --- / DWG NO KJF-VR-03 / A3 |
| HEAT TREAT --- | | | SCALE / TOOL ☐ PART ☐ SHEET OF |