FILE NAME

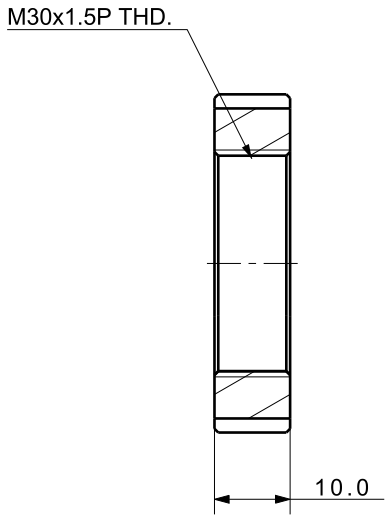


Section view A-A (1:1)

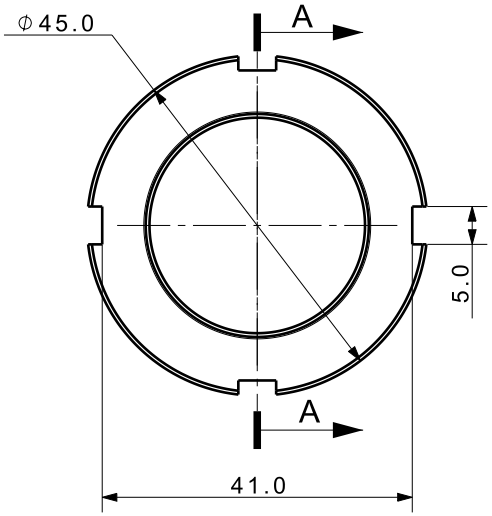


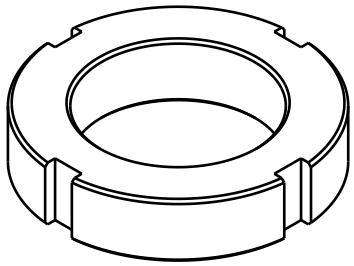

Isometric view (1:1)

| | | | |
|---|---|---|---|
| UNLESS OTHERWISE SPECIFIED | SIGNATURES | MO-DA-YR | (주)케이제이에프 TOTAL CLAMPING SYSTEMS |
| DIMENSIONS ARE IN MM | DRAWN | | |
| ALL SURFACES | CHECKED | | TITLE |
| TOLERANCES<br>ANGLE ±<br>X. ±<br>.X ±<br>.XX ± | APPROVED | | Mounting Accessories |
| FINISH | WORK ORDER NO | REF DWG NO. --- | DWG NO MBR-3010 A4 |
| HEAT TREAT | | SCALE / | TOOL ☐ PART ☐ SHEET OF |