FILE NAME:

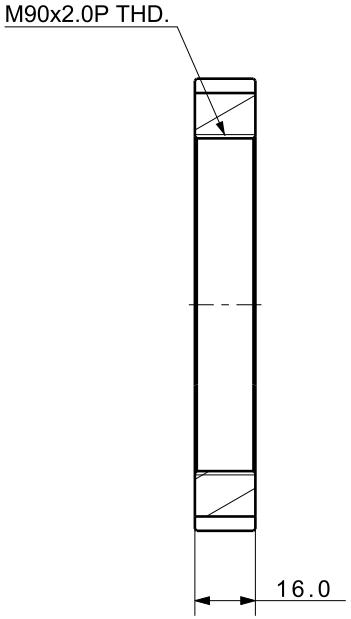

Section view A-A (1:2)

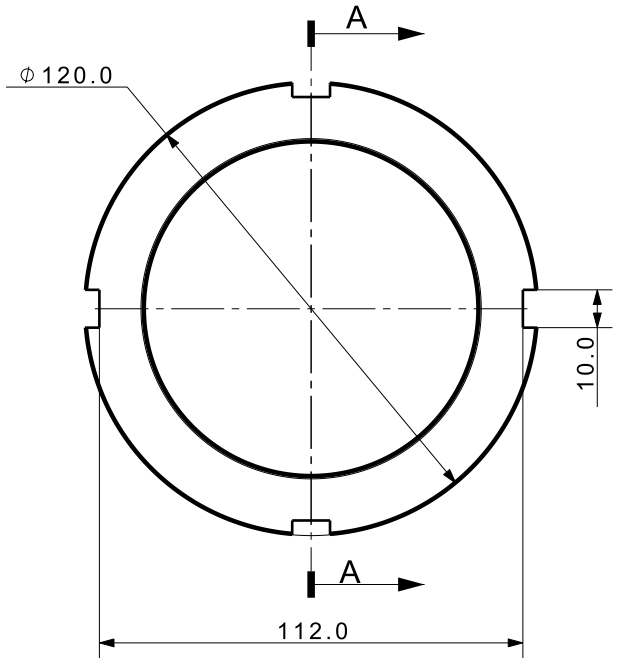

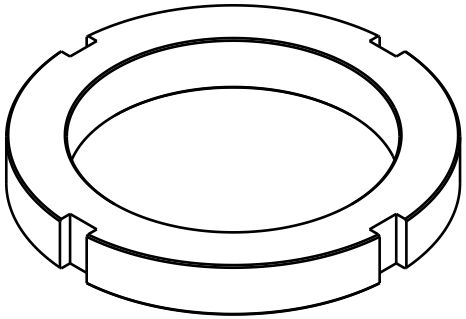

Isometric view (1:2)

UNLESS OTHERWISE SPECIFIED	SIGNATURES	MO-DA-YR	(주)케이제이에프 TOTAL CLAMPING SYSTEMS
DIMENSIONS ARE IN MM	DRAWN		
ALL SURFACES	CHECKED		TITLE
TOLERANCES ANGLE ± X. ± .X ± .XX ±	APPROVED		Mounting Accessories
FINISH	WORK ORDER NO	REF DWG NO. ---	DWG NO MBR-9016 A4
HEAT TREAT		SCALE /	TOOL ☐ PART ☐ SHEET OF