FILE NAME:

REVISIONS				
ZONE	LTR	DESCRIPTION	DATE	APPROVED

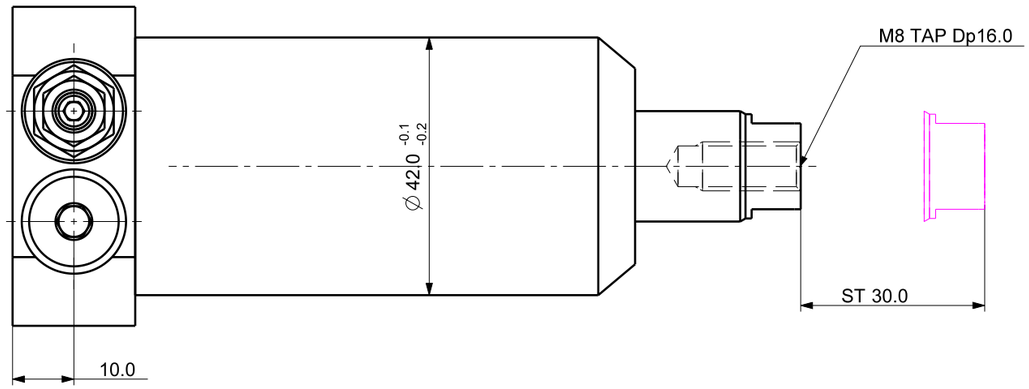

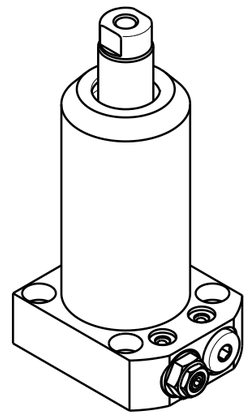

Isometric view (1:2)

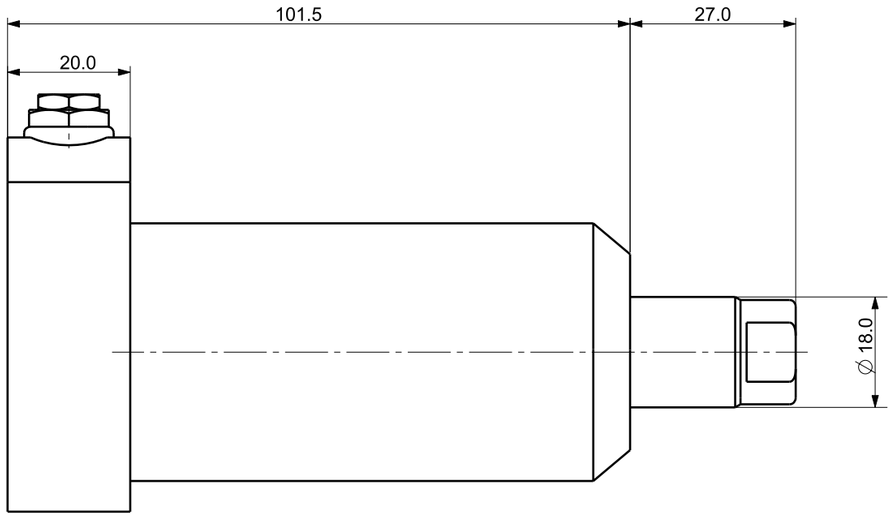

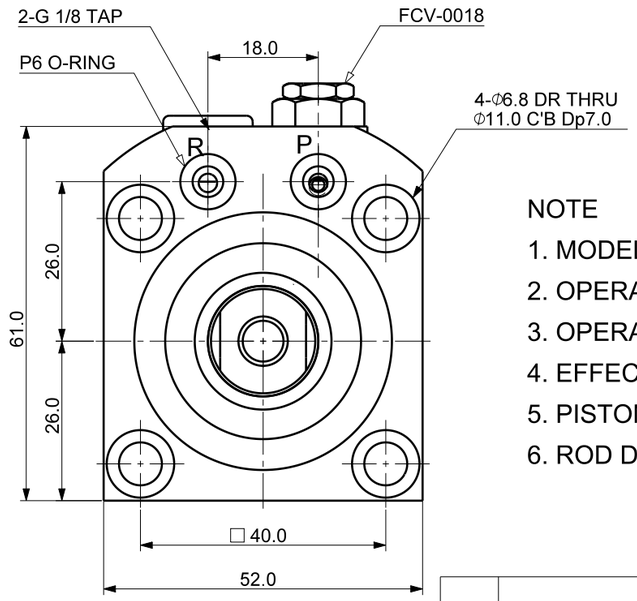

NOTE

1. MODEL No : SDP-2530FGTV
2. OPERATING PRESSURE : 15~250 Kgf/cm^2)
3. OPERATING TEMPERATURE : 0~60 ˚C
4. EFFECTIVE AREA(Cm^2) : PUSH=4.91 , PULL=2.36
5. PISTON DIAMETER : Φ25.0
6. ROD DIAMETER : Φ18.0

DET.NO	NAME	Q'TY	MAT'L	FINAL SIZES & PART No	REMARK

UNLESS OTHERWISE SPECIFIED	SIGNATURES	MO-DA-YR
DIMENSIONS ARE IN MM	DRAWN	
ALL SURFACES 6.3S	CHECKED	
TOLERANCES	APPROVED	
ANGLE ±		
X. ±		
.X ± 0.15		
.XX ±		
FINISH	WORK ORDER NO	
HEAT TREAT		

(주)케이제이에프
TOTAL CLAMPING SYSTEMS

TITLE

FLANGE CLAMP

REF DWG NO.	DWG NO	
---	SDP-2530FGVT	A3
SCALE /	TOOL ☐ PART ☐	SHEET OF