| REVISIONS | | | | |
|---|---|---|---|---|
| ZONE | LTR | DESCRIPTION | DATE | APPROVED |

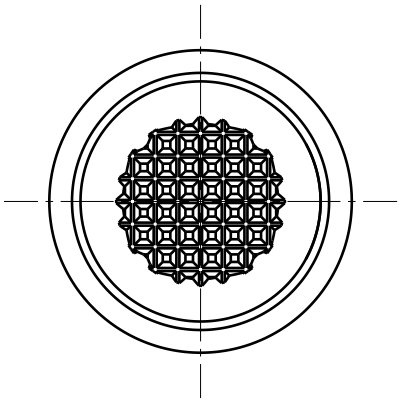

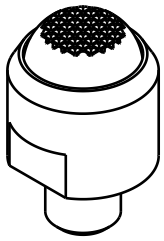

Isometric view (1:1)

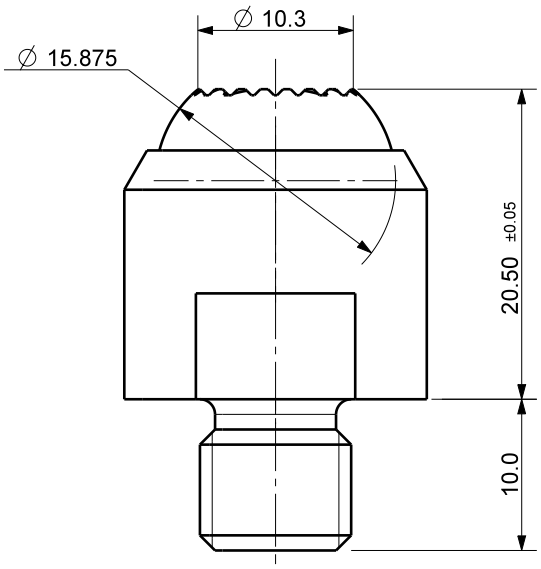


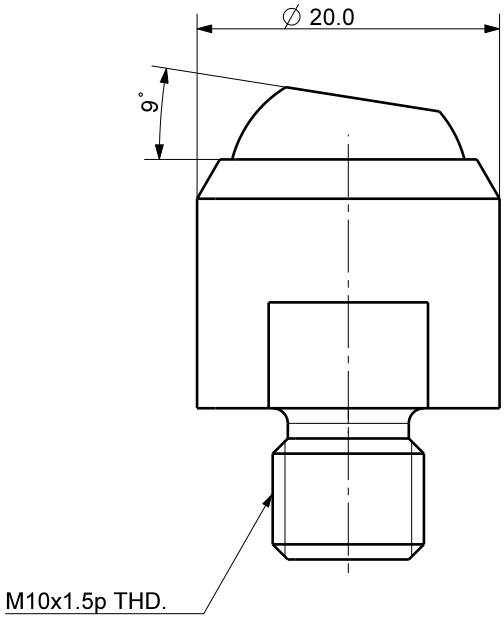


| DET.NO | NAME | Q'TY | MAT'L | FINAL SIZES & PART No | REMARK |
|---|---|---|---|---|---|
| | | | | | |

| | | |
|---|---|---|
| UNLESS OTHERWISE SPECIFIED | SIGNATURES | MO-DA-YR |
| DIMENSIONS ARE IN MM | DRAWN OYS | 00-00-00 |
| ALL SURFACES 6.3s | CHECKED | |
| TOLERANCES | APPROVED | |
| ANGLE ± | | |
| X. ± | | |
| .X ± 0.15 | | |
| .XX ± | | |

KJF 케이제이에프(주)
TOTAL CLAMPING SYSTEMS

TITLE

# SWIVEL PAD

| | | | |
|---|---|---|---|
| FINISH BLACK OXIDE | WORK ORDER NO | REF DWG NO. -- | DWG NO SPD-1000_- A4 |
| HEAT TREAT HRC18~22 | | SCALE | TOOL ☐ PART ☐ SHEET OF |