REVISIONS				
ZONE	LTR	DESCRIPTION	DATE	APPROVED

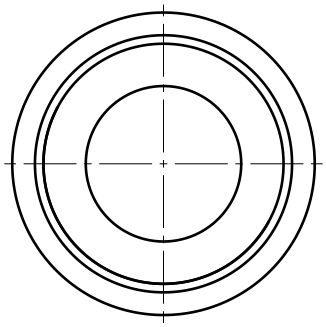

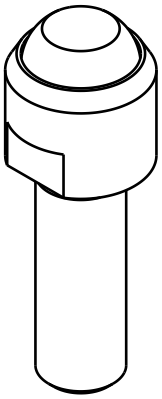

Isometric view (1:1)

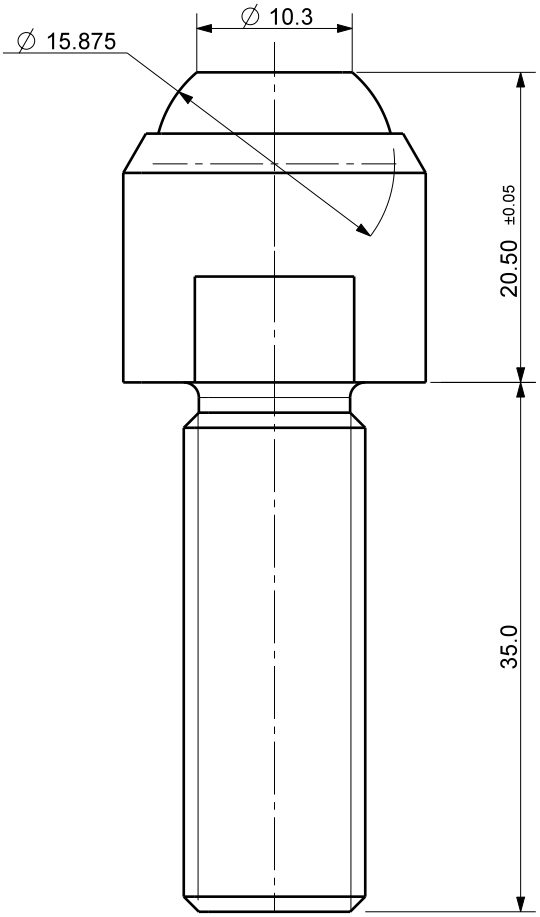

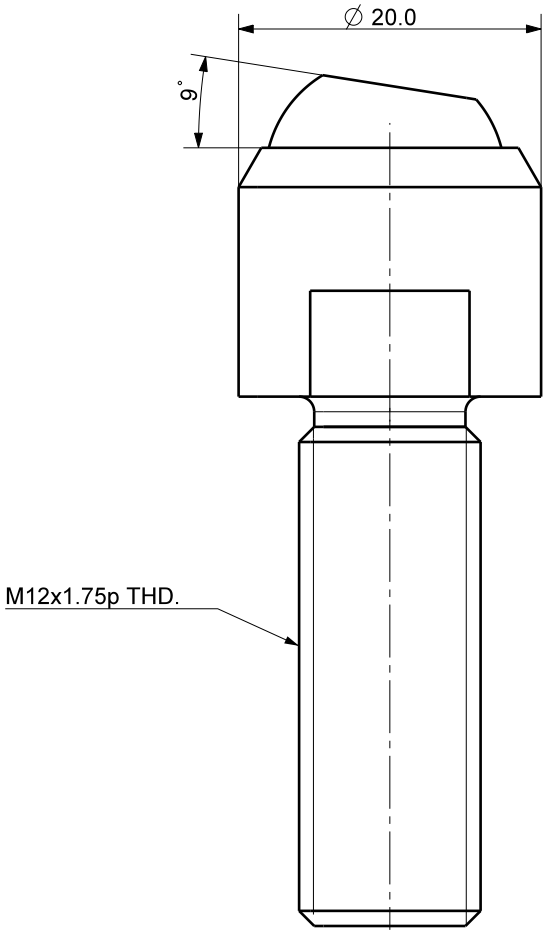

DET.NO	NAME	Q'TY	MAT'L	FINAL SIZES & PART No	REMARK

UNLESS OTHERWISE SPECIFIED	SIGNATURES	MO-DA-YR
DIMENSIONS ARE IN MM	DRAWN ---	00-00-00
ALL SURFACES 6.3s	CHECKED	
TOLERANCES	APPROVED	
ANGLE ±		
X. ±		
.X ± 0.15		
.XX ±		

KJF 케이제이에프(주)
TOTAL CLAMPING SYSTEMS

TITLE

SWIVEL PAD

FINISH BLACK OXIDE	WORK ORDER NO	REF DWG NO. --	DWG NO SPF-1235_-	A4
HEAT TREAT HRC18~22		SCALE /	TOOL ☐ PART ☐	SHEET OF