FILE NAME:

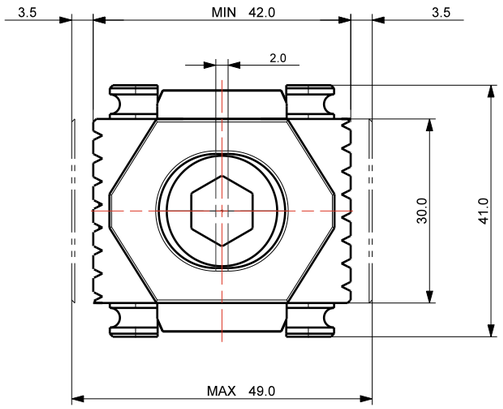

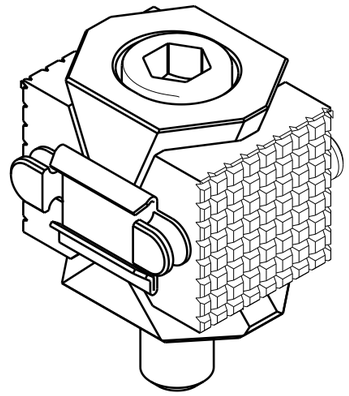

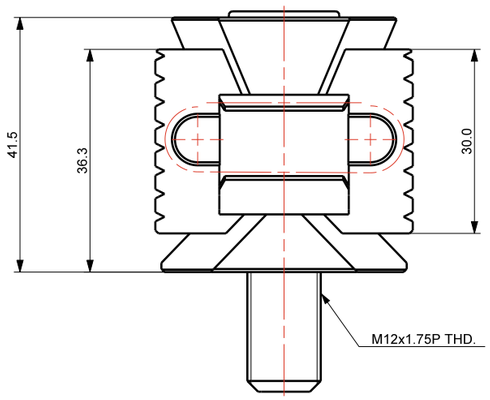

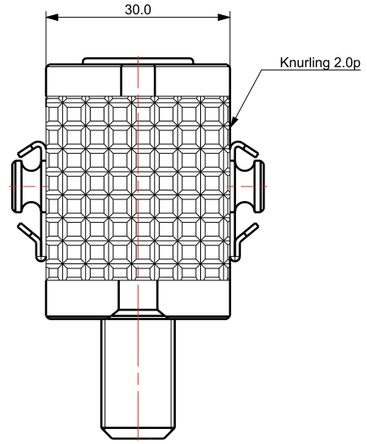

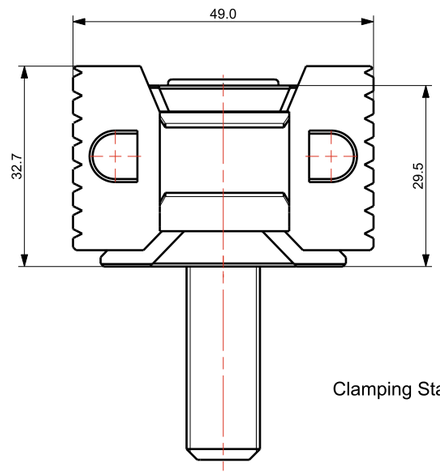

Clamping State

UNLESS OTHERWISE SPECIFIED	SIGNATURES	MO-DA-YR	(주)케이제이에프 TOTAL CLAMPING SYSTEMS
DIMENSIONS ARE IN MM	DRAWN		
ALL SURFACES	CHECKED		TITLE
TOLERANCES ANGLE ± X. ± .X ± .XX ±	APPROVED		VISE CLAMP
FINISH	WORK ORDER NO		REF DWG NO. --- / DWG NO STC-1223M / A3
HEAT TREAT			SCALE / TOOL ☐ PART ☐ SHEET OF